NO. 53 NOTES FROM THE SHOP $2.50

Woodsmith®

CHERRY DRESSER

SCANDINAVIAN CORNER CABINET

Woodsmith®

Number 53 October, 1987

Editor **Donald B. Peschke**
Design Director **Ted Kralicek**
Assistant Editors **Douglas L. Hicks**, **Douglas M. Lidster**
Project Designer **Ken Munkel**
Technical Illustrators **David Kreyling**, **Cary Christensen**, **Rod Stoakes**, **Chris Glowacki**
Customer Service **Sandy Baum, Mgr.**, **Vicky Robinson**, **Jackie Stroud**, **Pat Koob**
Computer Operations **Ken Miner**
Administrative Asst. **Cheryl Scott**, **Kate Bauma**
Building Maintenance **Archie Krause**

Woodsmith Stores

Operations **Steve Krohmer**
Marketing Manager **Steve Dozier**
Administrative Asst. **Christel Miner**
Store Managers:
St. Louis, MO **Jon Behrle**
San Francisco, CA **Terrie Noll**
Des Moines, IA **Kent Welsh**

WOODSMITH (ISSN 0164-4114) is published bimonthly (February, April, June, August, October, December) by Woodsmith Publishing Co., 2200 Grand Ave., Des Moines, IA 50312.
Woodsmith is a registered trademark of Woodsmith Publishing Co.

©**Copyright 1987** by Woodsmith Publishing Co. All Rights Reserved.

Subscriptions: One year (6 issues) $10, Two Years (12 issues) $18. Canada and Foreign: add $2 per year, U.S. funds only. Single copy price, $2.50.
Second Class Postage Paid at Des Moines, Iowa.
Postmaster: Send change of address notice, to Woodsmith Publishing Co., 2200 Grand Ave., Des Moines, IA 50312.
BACK ISSUES: All back issues of *Woodsmith* are still available. For a free booklet describing the contents and prices of all back issues, just send us your name and address to the address above.
SAMPLE COPY: We will be happy to send a free sample copy of *Woodsmith* to anyone you think would enjoy it. Just send us his/her name and address.

Sawdust

Over the years I've developed a fondness for a few favorite projects. The lingerie dresser in this issue is already on the list. (However, it's been converted from lingerie to sweaters.) I like the style and I'm particularly happy that we used cherry to build it.

One of the nice things about using cherry is watching it change character over time. When we first picked up the cherry and started working with it, it had a pale pinkish look to it. Nothing to get too excited about.

As the dresser neared completion, it was tempting to want to apply a stain to darken it — the way cherry ought to be. Don't be tempted. When the finish goes on (no matter what finish) cherry will darken down and look much better.

But the best is yet to come. Over a period of about 6 months to a year, cherry will darken naturally to a rich deep red as it's exposed to light. It will get to the color it's famous for; it just takes time.

The effect light has on cherry is important to remember. One problem is that you shouldn't put anything on top of the dresser and leave it there for a long time. Light won't be able to get to that area and it won't darken. (After about a year, the cherry will get as dark as it's going to get. Then you can put things on the top of the dresser and leave them there.)

PINE VS. HARDWOOD. Every once in awhile we get a letter scolding us for using expensive hardwoods for the projects shown in *Woodsmith*. "Don't you realize," the letters usually go, "not everyone can afford walnut and cherry for projects. Besides, I'm perfectly content working with pine."

I feel the same way every time I write the check for the lumber for an issue. But there's another side to the story. Granted, most hardwood lumber is expensive. But how much does pine cost?

As I was looking at the lumber bills for this issue, I was surprised. The bill included the cost of the cherry used for the lingerie dresser, and the pine used for the Scandinavian corner cabinet.

The grade of cherry we used was Selects & Better (the top grade for cherry). It cost $2.40 per board foot. For the Scandinavian cabinet we used Ponderosa pine, C & Better Select. It cost $3.27 per board foot.

The pine cost more than cherry. That's not the whole story of course. Ponderosa pine is a beautiful clear pine that's kiln dried down to the range for cabinet work. It's not No. 3 construction pine used to build houses.

I don't want to belabor the point, but the cost of lumber is all relative. In this case clear pine cost more than cherry. You could use constuction pine and save money.

But considering the amount of time invested in building a project and the overall quality of the finished piece, maybe you're worth the extra amount.

NEW METHODS. It's the nature of a magazine editor to always be looking for something new. For us, that means coming up with new designs or new techniques.

In this issue, the designs are very traditional, nothing new. But we did come up with a new way to make raised panels. (We used it to make the drawer fronts on the lingerie dresser.)

This new jig lets you cut raised panels on the router table (without buying one of those $100 router bits), and gives a cleaner cut and better overall results than on a table saw. Even if you don't want to build the dresser, take a look at this jig.

NEW FACES. In the past two months we've been busy adding to the staff. Three new technical illustrators have joined us to help with all the artwork that goes into each issue.

Cary Christensen, Rod Stoakes, and Chris Glowacki are all accomplished illustrators as well as avid woodworkers. It's a good feeling to have new, talented people with us. All of these guys have already contributed to this issue — both through their artwork and their comments (and enthusiasm) concerning future projects.

Steve Dozier has also joined us as the marketing manager for the *Woodsmith Stores*. Steve will be working on the advertising and promotion for the stores, as well as helping out with the project supplies that we're offering for projects shown in *Woodsmith*.

While I'm on the subject of the *Woodsmith Stores*, I'd like to mention that we've just recently opened our new store in Des Moines, Iowa - - our home base for the publishing company. We also moved the store in Berkeley, CA to a new, larger location. (It's still in Berkeley, but now at 1550 University Ave., and will soon have a new large parking lot.)

I've had the chance to work in the store here a few Saturdays. It's been a real eye-opening experience. The problem with publishing is that I don't get to meet the people I'm working for (everyone who subscribes to *Woodsmith*). But at the store, I'm face to face with almost every customer.

One thing I've been impressed with is that woodworkers aren't shy when it comes to offering opinions. That's great. I've learned a lot. And it will show in the stores, and in future issues of *Woodsmith*.

NEXT ISSUE. The next issue of *Woodsmith* (No. 54) will be mailed during the week of February 8, 1988.

Tips & Techniques

STRAIGHTEN A CROOKED EDGE

My favorite method for getting a working straight edge on a rough-sawn board is with a carrier board on the table saw.

I start by cutting a carrier board from scrap plywood to a width of about 8" and long enough to accept the workpiece.

The workpiece is usually nailed onto the top of the carrier board so it hangs slightly over one edge. Then, with the opposite edge of the carrier board running along the rip fence, cut a straight edge on the workpiece.

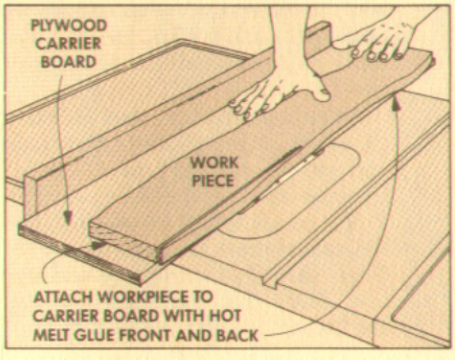

The problem with nailing through the workpiece is that hardwood will split when it's nailed. There are also times when I don't want nail holes in my workpiece.

Here's my trick: Instead of using nails I use two or three dabs of hot glue from a hot glue gun. A sharp rap with a mallet separates the two pieces and any glue residue can easily be chiseled off.

John A. Townsend
Coldwater, Michigan

CONDUIT BAR CLAMP

Most woodworkers make do with fewer bar or pipe clamps than would be ideal for a project simply because they can't afford them. I've designed a low-cost bar clamp (about $5 for a complete 5-foot clamp) that uses standard off-the-shelf hardware and ¾" rigid steel electrical conduit.

Editor's Note: We were skeptical — A bar clamp made from conduit? Then we made a clamp following Myron's instructions and were surprised. The clamp is not for heavy-duty jobs, but we found it adequate for most cabinet assembly, and by joining pieces of conduit you can make it any length.

I began building the clamp by making three blocks — a head block, pressure block, and tail block. All three blocks are made from two pieces of 4/4 stock cut to 2" wide and 3½" long (see drawing).

The two pieces for the head block are glued together, and then two holes are drilled through the block. One hole matches the outside diameter of the conduit (15/16") and the other hole is slightly larger than a 5/16" carriage bolt (⅜"). Then tap a 5/16" T-nut into the ⅜" hole.

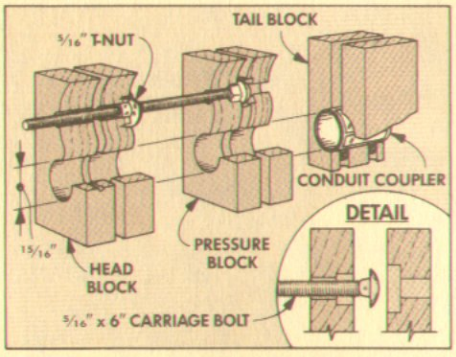

Next, clamp or screw (don't glue) the two pieces for the pressure block together and drill two through holes to match those in the head block. To permit the bolt to spin, open up the pieces and create a cavity for the carriage bolt head by drilling a counterbore in each piece. (See Detail in drawing.)

To make the tail block, start by clamping (don't glue) the two pieces together. Then stand the pieces on edge and drill a hole centered on the joint line. The diameter of the hole should match the outside diameter of a conduit coupler. Next, drill two holes in the bottom of this block that line up with the screws in the coupler.

To assemble the clamp, fit the carriage bolt head between the two pieces of the pressure block and glue the pieces together. Next thread the bolt through the T-nut in the head block. Then, I added a faucet handle (drilled out to 5/16"). It's fastened on the end of the bolt between two nuts, see Detail.

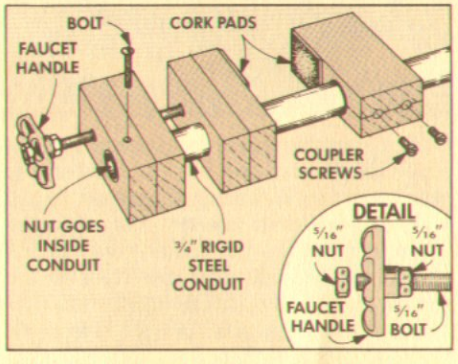

After the head and pressure blocks are assembled, slip them onto one end of the conduit. To lock the head block in place, drill a hole through the block and conduit and secure with a bolt and nut.

Before assembling the tail block, some work has to be done on the metal conduit coupler. Since the coupler must slide freely on the conduit, grind away the ridge on the inside with a rotary grinder or round file. Then file down any ribs on the outside so the coupler will fit into the tail block.

Finally, glue and clamp the block pieces around the coupler. Once the glue dried, I added pads cut from cork gasket material to the pressure block and tail block.

To use the clamp, slip the tail section over the conduit and move it up until it's close to the desired position. Then tighten down the two screws in the coupler. Now just turn the handle to tighten the clamp.

Myron E. Jacobsen
Xenia, Ohio

DOWELING BOX JOINTS

When I built the workbench that appeared in *Woodsmith* No. 50, I was concerned about the strength of the box joints that held the aprons and end caps of the top together. I felt there was a potential problem on the front right corner where the box joint is the only glue joint in the area.

To strengthen up the joint (and all of the corners) I added two ⅜" dowels. The dowels can be added down from the top for a decorative appearance, or up from the bottom to hide them.

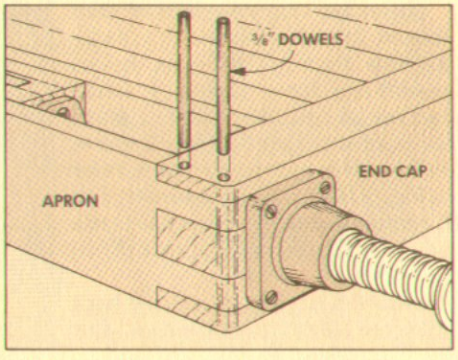

This application can be used for any project where you want to strengthen box joints (such as a drawer). If screws are used instead of dowels, box joints can even be made to knock down.

Joe Martinka
Sunnyvale, California

SEND IN YOUR IDEAS

If you'd like to share a woodworking tip with other readers of *Woodsmith*, send your idea to: *Woodsmith*, Tips & Techniques, 2200 Grand Ave., Des Moines, Iowa 50312.

We pay a minimum of $10 for tips, and $15 or more for special techniques (that are accepted for publication). Please give a complete explanation of your idea. If a sketch is needed, send it along; we'll draw a new one.

Lingerie Dresser

A SEVEN DRAWER CLASSIC CHEST

Honest, solid construction. I guess that's what I like about this seven-drawer dresser. It's built like it should be. Raised-panel drawer fronts. Solid-wood top. Frame and panel sides. Dovetail drawers. And just enough cove molding to give it a distinctive appearance.

Most important, the dresser seems to "fit" comfortably in almost any setting. It's a classic piece that doesn't stand out in a room like a piece of "homemade" furniture.

SIDE FRAMES

I began building the dresser by assembling the two side frames. These consist of three rails (horizontal pieces), two stiles (vertical pieces), and ¼" plywood panels.

Start work by cutting six rails from 4/4 stock (13/16" actual thickness). Cut the top rails (A) 3" wide, the middle rails (B) 2¾" wide, and the bottom rails (C) 3⅝" wide. Then cut all six rails to a common length of 10", see Fig. 1.

CORNERS. The three rails on each side are joined by two stiles to make the side frames. However, before assembling these pieces, I added another piece to the stiles. I glued the front and back face frame pieces (stiles) to the side frame stiles, refer to Fig. 5. This way each corner is an L-shaped assembly that consists of a side stile (D) and a front stile (E) or back stile (F).

STILES. The side, front, and back stiles are all cut from 4/4 stock. Cut the four side stiles (D) to a width of 2⅝" and the four front and back stiles (E and F) to a width of 1¾", see Fig. 1. Then cut all eight pieces to a common length of 44⅞".

Note: The length of the stiles determines the height of the dresser. This measurement depends on the number and size of the drawers. Since I wanted to use a standard dovetail jig, I had to make the drawer height a multiple of ⅞". (I chose 5¼".) Once all seven drawers, rails, and gaps between each drawer were added up, the length of the stiles came to 44⅞".

JOINERY

After all of the rails and stiles are cut to finished size, the joints that hold them together can be cut.

GROOVE FOR PANELS. Start by cutting a ½"-deep groove on the edges of the rails (A,B,C) and the side stiles (D) to accept the plywood panels, see Fig. 1. Center the groove on the thickness of the workpiece.

As the grooves are cut, cut only the *inside* edge of the top and bottom rails (A and C), and the side stiles (D). Then cut the groove on *both* edges of the middle rails (B).

Shop Note: The panels are made from ¼" plywood. But most hardwood plywood actually measures less than ¼" thick. So cut the grooves just wide enough to accept the actual thickness of the plywood panels.

STUB TENONS. After cutting the grooves, I cut stub tenons on the ends of all six rails to fit into the grooves on the stiles. The length of the tenons matches the depth of the grooves (½") and the thickness matches the width of the grooves.

DADOES. Next, I switched over to work on the front and back stiles (E and F). The first step here is to lay out the position of eight ¼"-wide dadoes, see Fig. 1. (These dadoes are pre-cut to hold the frames that support the drawers.)

The first dado is ⅞" from the top end. (Note: Mark the "TOP" of each piece so the dadoes can be lined up later.) Then seven more dadoes are laid out every 6⅛". This should all come out so there's 1⅛" between the top of the last dado and the bottom of the stile.

After laying out the dadoes, raise the dado blade ¼" above the table and set the rip fence as a stop ⅞" from the inside of the blade, see Fig. 2. Now check that the blade matches the layout line and cut the dado. Then turn the workpiece end for end, check that the blade matches the line on that end, and cut a dado.

After cutting the end dadoes on all four pieces, move the fence 7" from the blade and cut the second dado in each piece. Repeat the process to cut the remaining dadoes.

CORNER JOINT. When all the dadoes are cut, you can begin work on the corner joint that holds the front and back stiles (E,F) to the side stiles (D), see Fig. 3.

The first step is to cut a ¼"-wide by ⅜"-deep groove down the inside face of the front and back stiles (E, F). (This groove is cut on the face with the eight dadoes.) Position the fence so the distance to the outside of the blade equals the thickness of the side stile (D), see Step 1 in Fig. 4.

A PROBLEM. Here's where I ran into the first design problem. If you went ahead and cut a tongue on the edge of the side stile (D) to fit into this groove, the eight dadoes would be exposed. (You would see eight "holes" on the sides of the dresser.)

To prevent this, I cut a rabbet the same depth as the dadoes on the inside face of each front and back stile (E,F). The side stile (D) then fits into the rabbet and hides the dadoes, see Fig. 3.

RABBET. To cut the rabbet, raise the dado blade ⅜" above the table. Then stand each front and back stile on edge and trim a section off the inside face, see Step 2 in Fig. 4. After this cut is made, the dadoes should have disappeared up to the groove.

BACK RABBET. Next, lower the dado blade to ½" above the table and cut a

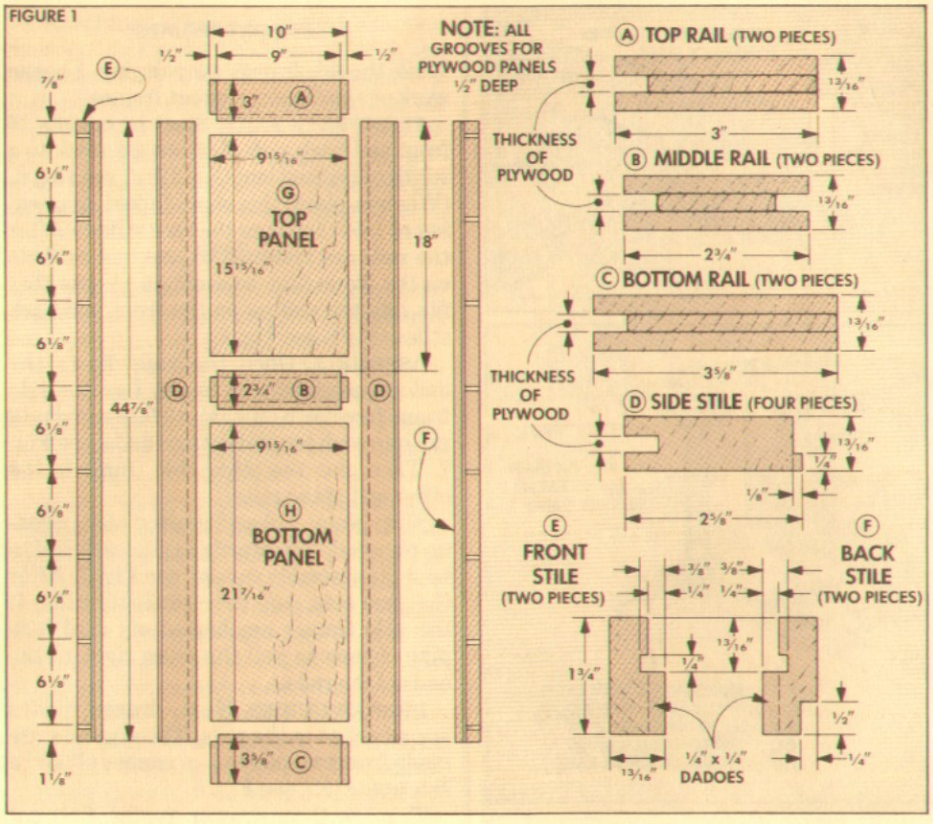

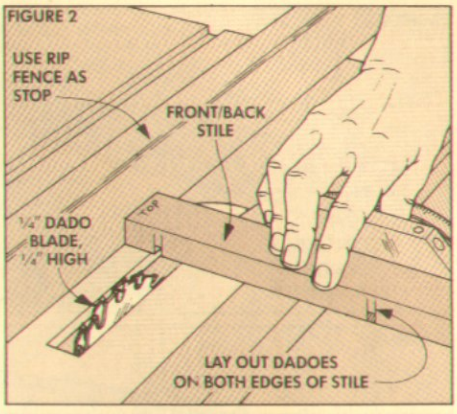

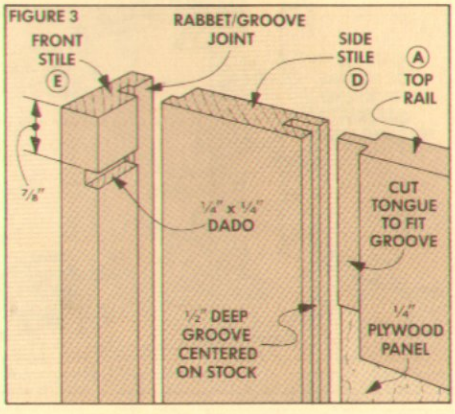

rabbet on the back stiles (F) for the ¼" plywood back. (Note the position of this rabbet in Step 3.)

TONGUE. The last step is to make a tongue on the side stiles (D) to fit the groove in the front and back stiles (E,F). To make the cut, lay the stile flat on the saw and raise the blade just high enough to produce a tongue that fits into the groove, see Step 4.

ASSEMBLY

Once the tongues are cut to fit the grooves, dry-assemble the frames to take measurements for the plywood panels (G and H). (Cut the panels so there is a 1/16" clearance on the height and width, see Fig. 1.)

Then the frames can be assembled. I did this in two steps. First, I glued up the corner pieces.

STILE TO STILE. Start by gluing a side stile (D) to a front stile (E) — making sure the eight dadoes face in, see Fig. 5. Check the corner to be sure it's perfectly square.

PANELS, RAILS, AND CORNERS. After all four corners are assembled, glue and clamp them to the rails and panels to make a side frame, see Fig. 5.

Shop Note: Before I actually glued up these frames, I double-checked to make sure I had two mirrored sides. Also, check to see that the "TOP" label on all four stiles is actually on the top.

Once everything is lined up, glue each side assembly together checking that the pieces lie flat against the pipe clamps and the ends are flush.

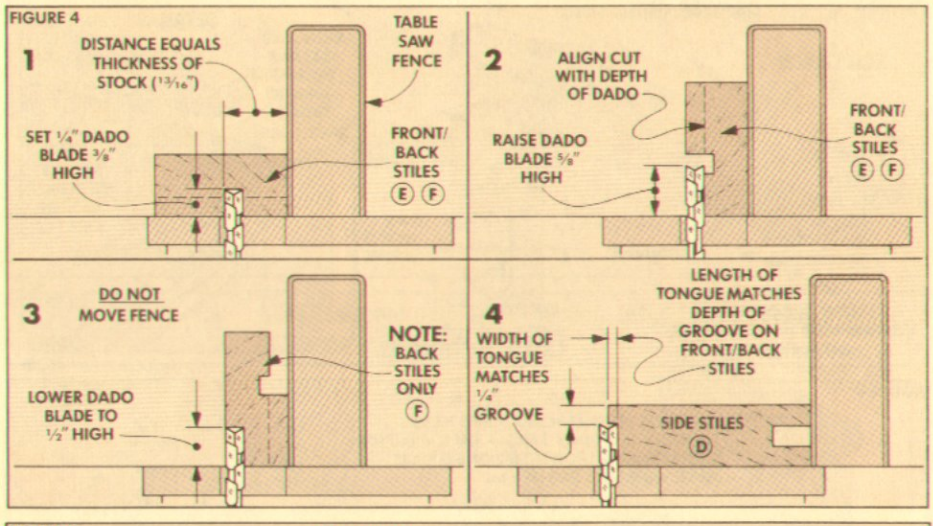

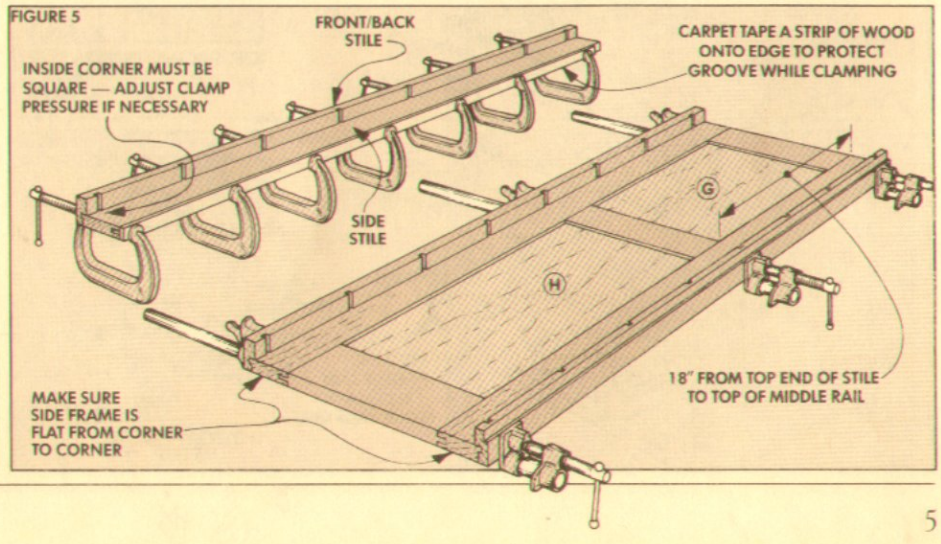

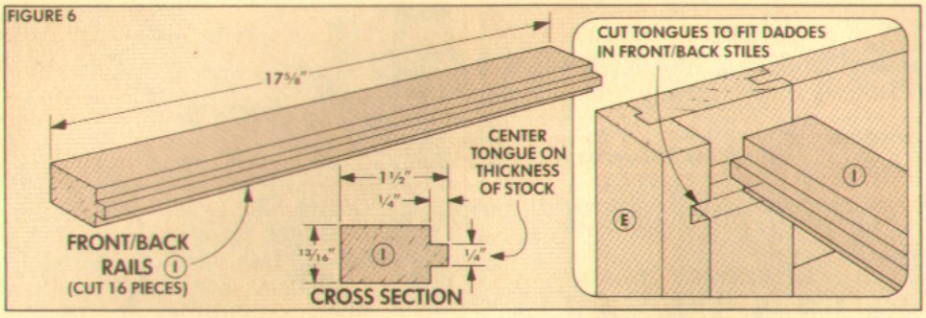

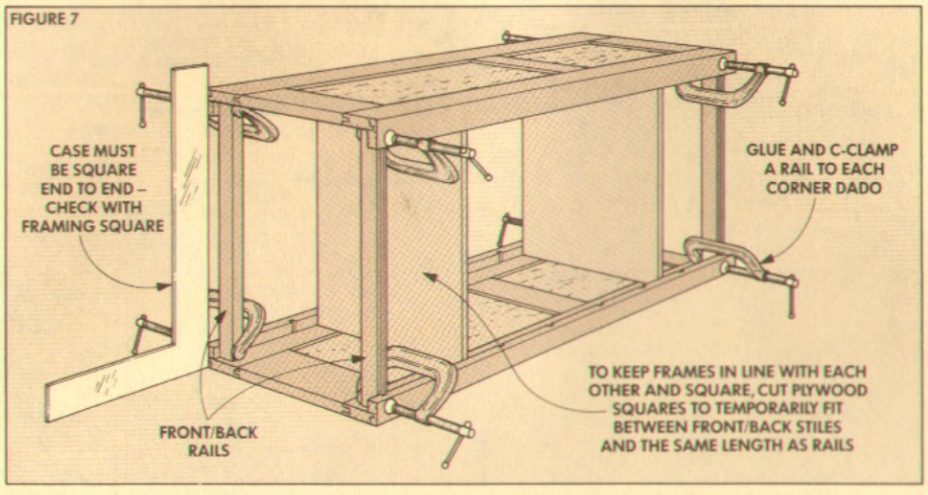

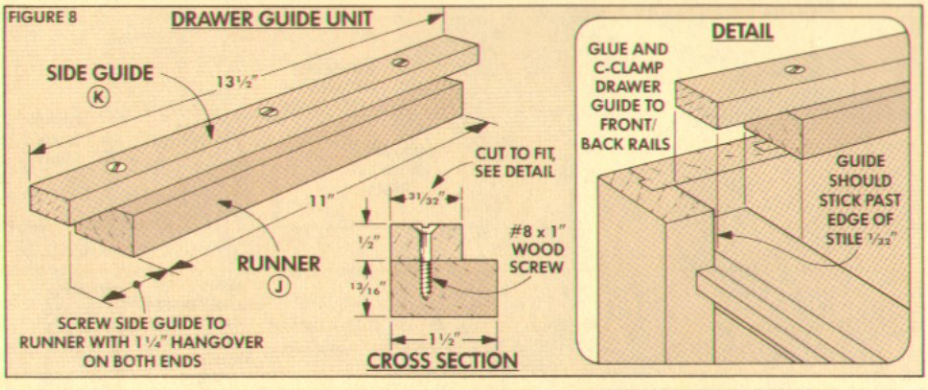

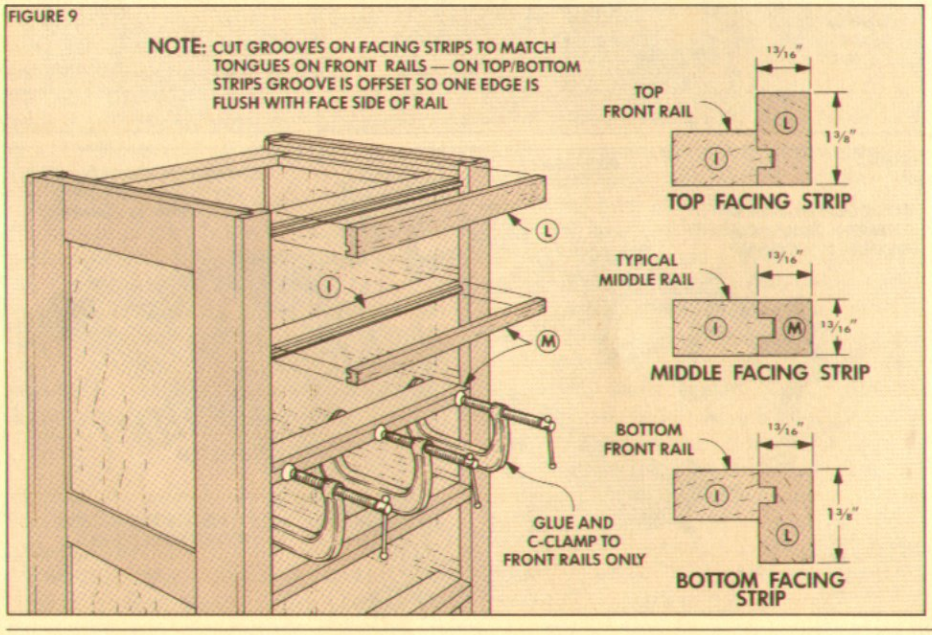

SUPPORT FRAMES

While the side frames were drying, I began work on the drawer support frames.

FRONT/BACK RAILS. Start by cutting 16 front and back rails (I) from 4/4 stock to a width of 1½" and length of 17⅝", see Fig. 6. (When in place, this should yield an opening of 15¾" between the face stiles.) After the rails are trimmed to size, cut rabbets on the front edge to create a tongue that fits into the dadoes on the front and back stiles (E,F), see Fig. 6.

ASSEMBLY. Once the rails fit in the dadoes, assembly can begin. Lay one side frame face down on a flat surface and glue a rail into each top and bottom dado, see Fig. 7. Then glue the other side frame to the other end of the rails.

Shop Note: I placed a piece of squared-up plywood temporarily inside each end to hold the assembly square, see Fig. 7. After the glue sets, add the remaining rails. If the side frames are bowed outward, use pipe clamps to pull the sides tight to the ends of the rails.

DRAWER GUIDES. Next, drawer guides are mounted to the rails. These guides are made from two pieces — a runner (J) and a side guide (K), see Fig. 8.

To make these drawer guides, first cut 16 runners (J) from 4/4 stock to a width of 1½". Then cut them to length to match the distance between the front and back rails on the cabinet (11" in my case), see Fig. 8.

Next, cut 16 side guides from ½" stock. To determine their width, measure from the inside corner to the edge of the front stile and add 1/32", see Detail. Then cut them 2½" longer than the runners (13½").

Now screw a side guide to the top of a runner to make a complete drawer guide unit, see Fig. 8. The side guide hangs over the runner by 1¼" on each end so it can be glued to the top of the front and back rails, see Detail in Fig. 8.

FACING STRIPS

After all of the drawer guides are glued in place, work can begin on the front facing strips. There are two different sizes of facing strips, see Fig. 9. The top and bottom strips (L) are wider (1⅜") than the six middle strips (M) (13/16"). But all of the strips are made from 4/4 stock and cut to a rough length of 16".

CUT THE GROOVES. After cutting to rough length, cut a ¼" x ¼" groove on the back face of each facing strip to fit onto the tongue on the front rails (I), see Fig. 9. The groove on the top and bottom strips (L) is offset on the width as shown in Fig. 9. The groove on the six middle strips (M) is centered on the thickness of the stock.

CUT TO LENGTH. After the grooves are cut, all the facing strips can be cut to length to fit between the front stiles and then glued in place, see Fig. 9.

CHAMFERS. Next, I routed stopped chamfers on the four corners. To stop the chamfers near the ends, clamp a stop block flush with each end of the stile, see Fig. 10. (Option: You can also rout a chamfer around the *inside* of the frame by using a V-groove bit and a guide on the bottom of the router, see *Woodsmith* No. 49, page 23.)

BASE

After routing the chamfers, work can begin on the base. The base consists of a mitered frame glued on top of a kickboard frame.

MOLDED FRAME. Start by cutting a frame front (N) and two frame sides (O) from 4/4 stock to a width of 2⅜", see Fig. 11. Then rough cut the front to a length of 23" and sides to a length of 18".

Before cutting the pieces to final length, rout a bullnose edge on the pieces. First, rout a ½" round-over on the top edge, see Step 1 in Fig. 11. Then, to rout the bottom edge, switch to a ¼" round-over bit and raise it 3/16" above the table, see Step 2.

After the pieces are routed, miter the front piece (N) on both ends so the length is 2¼" longer (from long point to long point) than the width of the cabinet. (In my case the frame front was 21½.") Now, miter each side piece (O) on one end only and cut them 1⅛" longer than the depth of the cabinet (16¼").

Next, glue the front miters and hold them on a flat surface until the glue sets.

KICKBOARD. After the three-sided frame is glued, cut a kickboard front (P), back (Q), and two sides (R) from 4/4 stock to a width of 3½", see Fig. 12. Then miter both ends of the kickboard front (P) and back (Q) so the length of each piece is ½" shorter than the bullnose frame (21").

Next, miter both ends of each kickboard side (R) so the length is ¼" shorter than the bullnose frame sides (16").

KERF AND SPLINE. To help keep the miters aligned while clamping, cut a kerf in each miter. Then rip a spline off the edge of a piece of 4/4 stock to fit the kerf, see Joint Detail in Fig. 12. Once the joints are cut, glue the kickboard frame together checking each corner for square.

ASSEMBLY. After the kickboard frame dries, glue the three-sided bullnose frame to the top of the kickboard frame, see Fig. 13. The bullnose frame is centered on the front and flush with the back. (This leaves a ¼" overhang on the front and sides.)

FILLER STRIP. One final step is to glue a filler strip to the top of the kickboard back, see Detail in Fig. 13. This strip creates a ¼" rabbet for the cabinet back to fit into.

BASE TO CASE. To attach the base to the case, drill shank holes through the top of the molded frame. Next, turn the case upside down, and center the base across the front and flush with the back. Then mark and drill the pilot holes, and screw the base to the case, see Fig. 14.

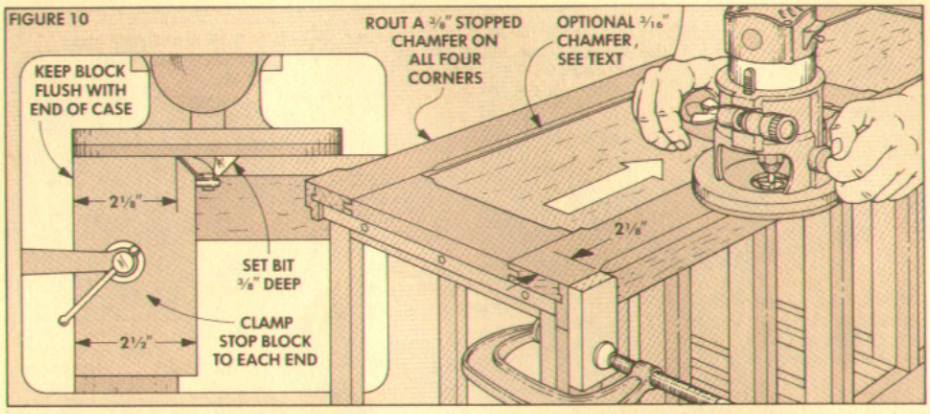

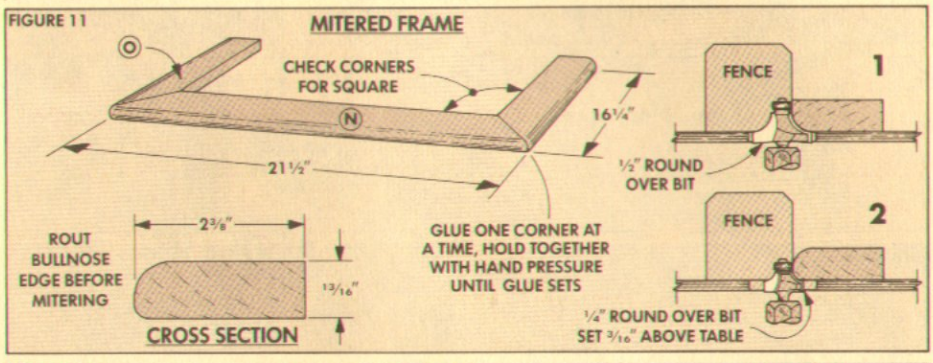

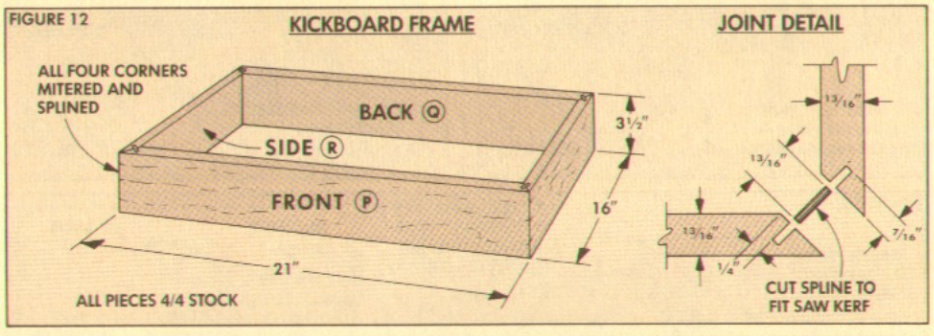

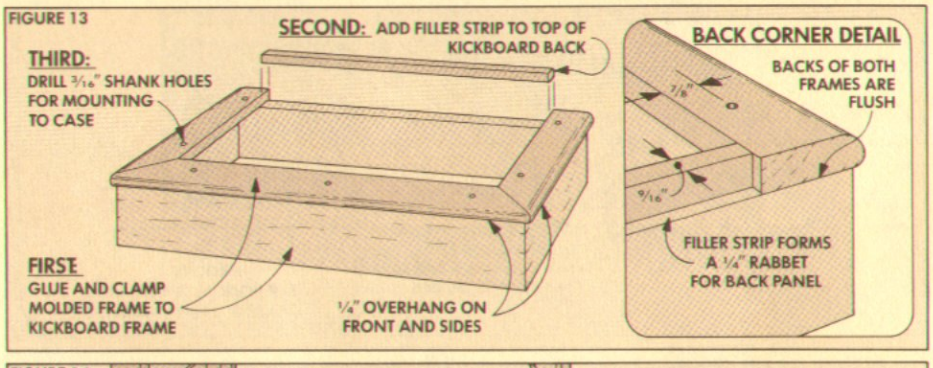

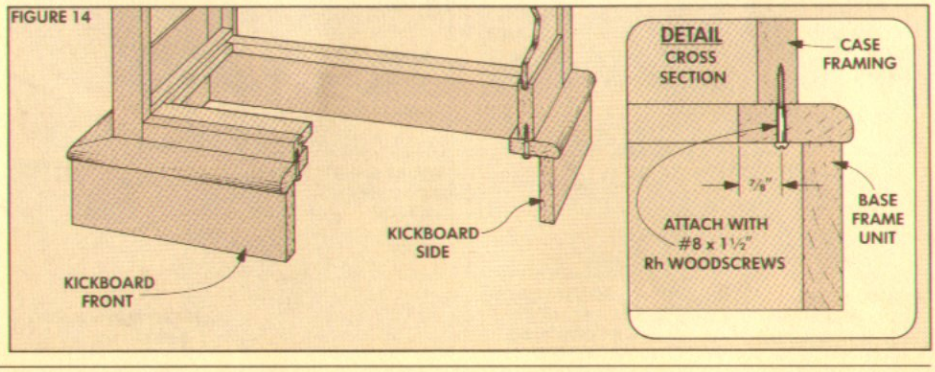

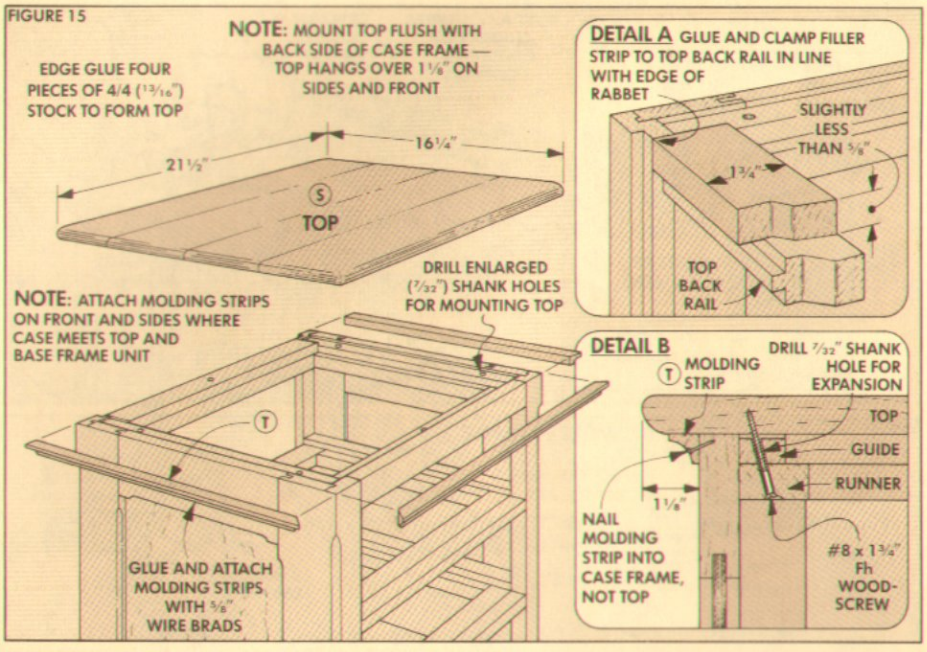

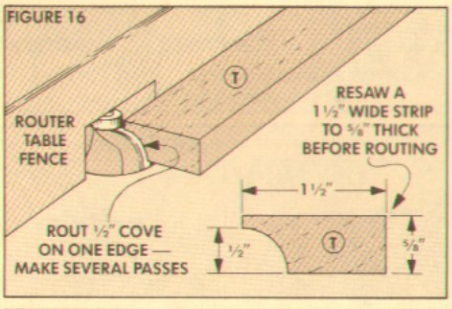

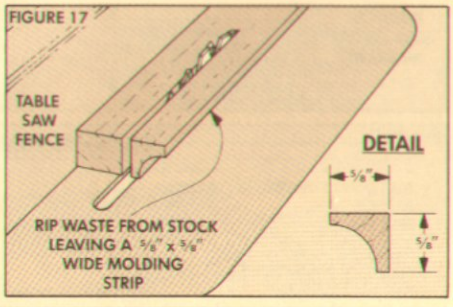

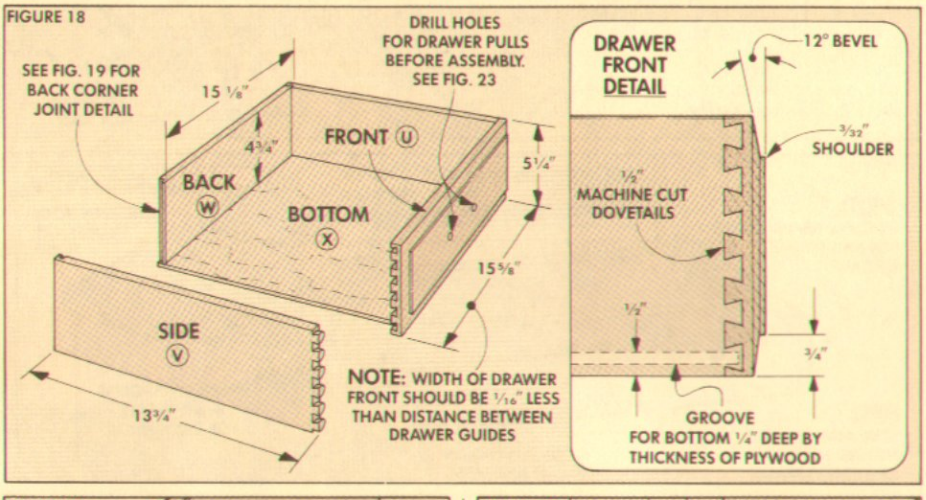

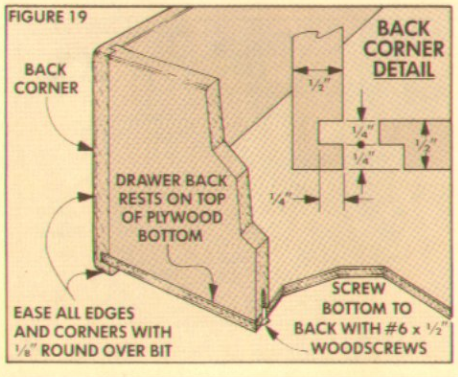

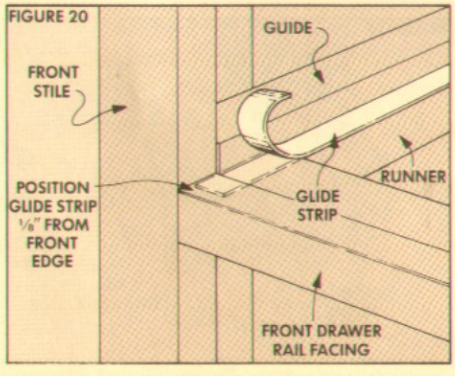

THE DRESSER'S TOP

After the base was screwed to the bottom of the case, I started work on the top (S).

BUILD UP TOP. Begin by edge-gluing four pieces of 4/4 stock to make a blank that's 18" wide and 22½" long. After it's dry, plane it flat and cut it to finished size: 2¼" longer than the cabinet's width and 1⅛" wider than its depth, see Fig. 15.

ROUT PROFILE. Next, rout the two sides and the front (but not the back) creating the same bullnose profile as on the base frame — except the ¼" round-over is on the upper edge, see Detail B in Fig. 15.

FILLER STRIP. Before screwing down the top, I added a filler strip between the top back rail and the case top, see Detail A.

ATTACHING TOP. To secure the top, first center the top on the case (flush in back) and clamp it down. Then drill angled holes with a #8 pilot/countersink bit up through the top rails and drawer guides, see Detail B in Fig. 15.

After drilling the holes, remove the top and enlarge the shank holes so the top can expand and contract with changes in humidity. Then screw down the top.

MOLDING STRIPS

To dress up the front and sides of the cabinet, I added molding strips above the base and below the top, see Fig. 15.

MAKING THE STRIPS. To make the six strips (T), start by resawing some 1½" wide stock to ⅝" thick. Then rout a ½" cove on one edge, see Fig. 16. Next, trim the molding off the outside edge of the workpiece, see Fig. 17.

MITER. Now miter the strips to fit around the front and sides of the cabinet. Then glue and nail each strip to the case, see Detail B in Fig. 15. (For a tip on hiding the nails, see Talking Shop, page 23.)

DRAWERS

After the molding strips are in place, the only thing left is to make the drawers.

CUT THE PIECES. Begin by cutting seven drawer fronts (U) from 4/4 stock to 5¼" wide and 1/16" less in length than the distance between the guides, see Fig. 18.

Next, cut fourteen drawer sides (V) from ½" stock 5¼" wide and 13¾" long. Then cut seven drawer backs (W) from ½" stock to a width of 4¾" and ½" less in length than the drawer fronts.

JOINERY. Once all the pieces are cut to size, rout half blind dovetail joints on the front corners of each drawer.

Next, cut a dado across the back end of each side piece and a matching tongue on both ends of each back piece, see Fig. 19.

BOTTOM. Now, cut a ¼"-deep groove for the bottom panel on the inside edge of the sides and front, see Fig. 18.

Then cut a ¼" plywood bottom (X) to fit between the bottom of the side grooves

and from the bottom of the front groove to the back edge of the drawer back.

RAISED PANELS. Before assembly, the drawer fronts are cut to create a raised field. (For more information, see page 10.)

Then, drill the holes for the drawer pulls. Counterbore a ⅝" hole for the nut on the back side and then drill a ¼" shank hole, refer to Fig. 23.

ASSEMBLY. Finally glue up the drawer, checking that the corners are square. (To help keep the drawers square during assembly, I built a jig, see page 23.)

When the glue dries, slide the bottom panel in place and screw it to the drawer back, see Fig. 19.

GLIDE STRIPS. There are a few details to complete the drawers. To help the drawers glide smoother and create a slight gap below each drawer front, I added nylon strips to the drawer guides, see Fig. 20.

DRAWER STOPS. Also, to stop the drawers from going too far back into the cabinet, I glued and clamped a ¼" pad to the top of each front rail, see Fig. 21 and 22.

The opposite is to stop the drawers from being pulled all of the way out. To do this I screwed a turnbuckle to the back of the front rail above each drawer, see Fig. 23.

BACK. When all the drawer work is done, cut a ¼" plywood back (Y) and screw it in place.

FINISH. I finished the dresser with General Finishes' new Two-Step System (see page 24) and then mounted the pulls.

FIGURE 21

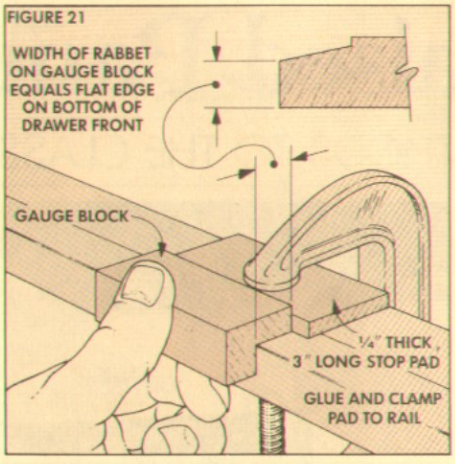

FIGURE 22

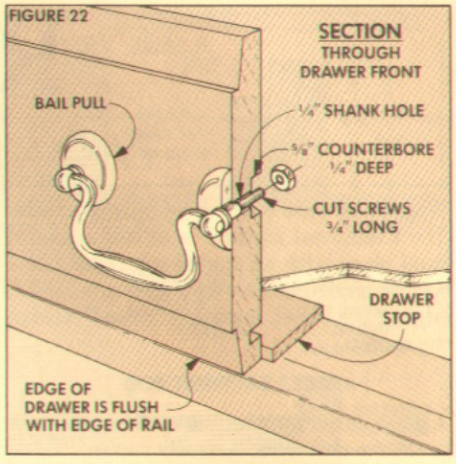

FIGURE 23

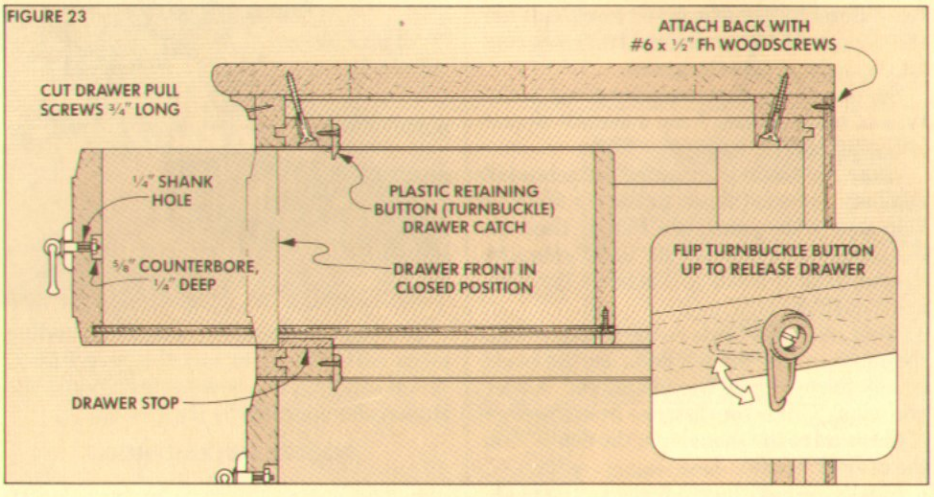

MATERIALS LIST

Overall Dimensions: 50" h x 21½" w x 16¼" d	
SIDE FRAMES	
A Top Rails (2)	13/16 x 3 - 10
B Middle Rails (2)	13/16 x 2¾ - 10
C Bottom Rails (2)	13/16 x 3⅝ - 10
D Side Stiles (4)	13/16 x 2⅝ - 44⅞
E Front Stiles (2)	13/16 x 1¾ - 44⅞
F Back Stiles (2)	13/16 x 1¾ - 44⅞
G Top Panels (2)	¼" ply. - 9 15/16 x 15 15/16
H Bottom Panels (2)	¼" ply. - 9 15/16 x 21 7/16
INTERIOR FRAMING	
I Front/Back Rails (16)	13/16 x 1½ - 17⅝
J Runners (16)	13/16 x 1½ - 11
K Side Guides (16)	½ x 31/32 - 13½
L Top/Bottom Facing (2)	13/16 x 1⅜ - 15¾
M Middle Rail Facing (6)	13/16 x 13/16 - 15¾
BASE/TOP	
N Frame Front (1)	13/16 x 2⅜ - 21½
O Frame Sides (2)	13/16 x 2⅜ - 16¼
P Kickboard Front (1)	13/16 x 3½ - 21
Q Kickboard Back (1)	13/16 x 3½ - 21
R Kickboard Sides (2)	13/16 x 3½ - 16
S Top (1)	13/16 x 16¼ - 21½
T Molding Strips (6)	⅝ x ⅝ - 10 ft.
DRAWERS	
U Fronts (7)	13/16 x 5¼ - 15⅝
V Sides (14)	½ x 5¼ - 13¾
W Backs (7)	½ x 4¾ - 15⅛
X Bottoms (7)	¼" ply. - 15⅛ x 13 11/16
Y CABINET BACK (1)	¼" ply. - 16¾ x 44⅞

CUTTING DIAGRAM

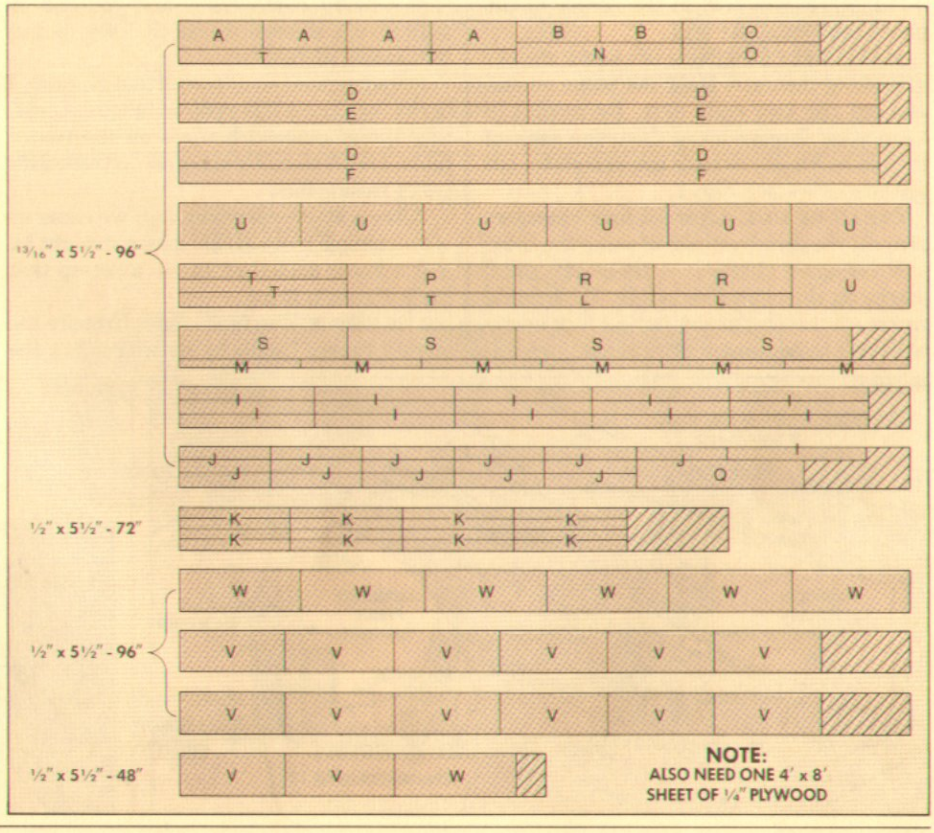

Raised Panels

TWO METHODS TO THE CLASSIC LOOK

What's the best way to cut raised panels? The traditional method is to use a special hand plane with an angled sole. This plane cuts an angled border (chamfer) around the edge of the panel, leaving a "raised" field in the center.

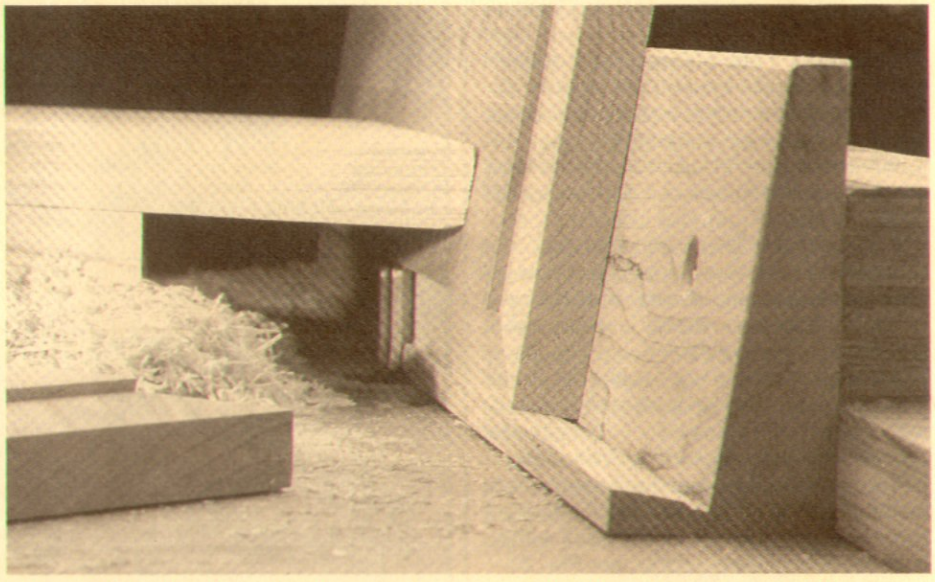

TABLE SAW METHOD

A much easier approach is to use a table saw to cut the chamfers. Actually you're making two different kinds of cuts — two rip cuts (on the sides, with the grain) and two cross cuts (at the ends, across the grain).

So, one of the first considerations is the type of blade to use. I use a carbide-tipped (40 or 50 tooth) *combination* blade.

After the blade is mounted, attach a tall auxiliary plywood fence to the rip fence to help steady the panel, see Fig. 1. Then tilt the blade to an angle of 10° to 20°. (On the dresser drawer fronts in this issue, I used an angle of 12°.)

Next, raise the blade so the distance from the table to the highest point on the blade equals the width of the chamfered border you want. This is the distance from the edge of the panel to the shoulder of the field (¾" on the drawer fronts).

Finally, adjust the rip fence so the blade cuts off enough to leave a 3/32"-high shoulder — to "raise" the field in the center of the panel, see Detail in Fig. 1.

MAKE THE CUTS. Now it's just a matter of making the cuts. Hold the panel on end and cut the two ends first. Be careful to keep your fingers away from the path of the blade. Once the ends are complete, cut the two sides, see Fig. 1.

CLEAN UP CUT. After all four chamfers are cut, the disadvantage of using the table saw becomes obvious — there are swirl marks on the chamfered edge. It's usually worse on the end grain, but all four edges will have to be sanded or scraped.

To sand the chamfers, I make a sanding block with a bevel on one side, see Fig. 2. When sanding, the bevel rides against the angled shoulder left by the saw cut.

ROUTER TABLE METHOD

The swirl marks are even worse if you're working with cherry (as I was on the dresser). Cherry burns easily and you end up with swirls of burn marks that are almost impossible to sand out.

Dreading the thought of all that sanding, I decided to try a different technique — cutting the chamfered borders on the router table. I don't mean by using one of those $100 panel-raising bits.

After a little experimenting, we came up with a simple method that uses a straight bit and a fence angled at 12° — a set-up that costs almost nothing.

THE FENCE. The first step is to make the angled fence. Begin by cutting a 2x4 the same length as the main part of the router table fence (24" on the *Woodsmith* router table).

CUT THE ANGLE. Then cut an angled face and small support ledge on the front of the fence. I cut the angle and ledge in two steps, see Fig. 3. First, tilt the saw blade to 12° and move the rip fence so it's ⅛" from the blade (measured at the table top level), see Detail A in Fig. 3.

Since the cut is deep, I made it in two passes. Raise the blade about 2" above the table and make a first pass. Then raise the blade 3⅛" above the table (leaving room for the ⅜"-high ledge) and make a second pass, see Detail A in Fig. 3.

CUT THE LEDGE. Next, to form the angled ledge, lower the blade and move the rip fence to the other side of the blade. Then set the fence ⅜" from the blade (at the table top) and raise the blade so it cleans out the waste, see Detail B.

FIGURE 1

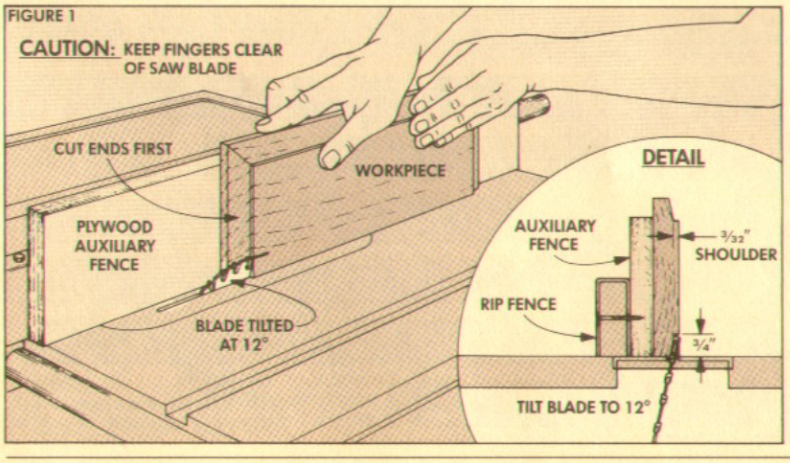

FIGURE 2

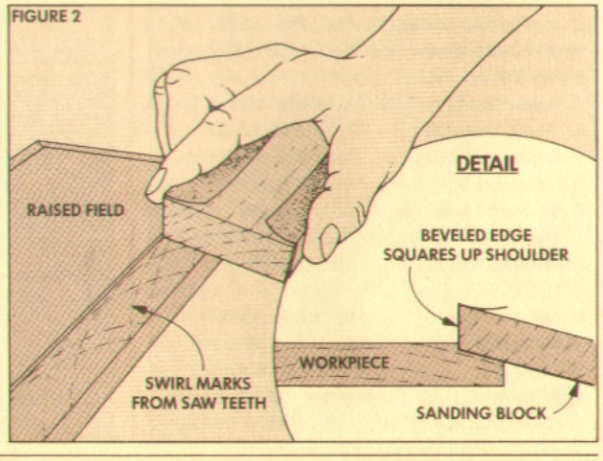

Shop Note: To keep the workpiece from pinching down on the waste piece, I slipped a ⅛" Masonite spacer into the first kerf, see Detail B.

NOTCH FOR BIT. After the ledge is cut, notch out a small opening in the ledge to fit around the router bit, see Fig. 4.

MOUNT WITH SCREWS. Next, mount the angled fence to the *back* face of the router table fence (so the screw hole won't be on the front), see Fig. 4.

FEATHERBOARD. After the angled fence was screwed in place, I made a featherboard to hold the panel tight to the fence, see Fig. 5. (It also acts as a guard when routing.)

I added a spacer block under the featherboard so it pressed tight against the field (center section) of the raised panel (not the chamfered edge), see Fig. 5. Also, I trimmed off the end of the featherboard at a 12° angle to match the angle of the fence.

ROUTING THE RAISED PANELS

To rout the raised panels, I stood in front of the router table and reached over the fence, see Fig. 5. Start by mounting a ½" straight bit in the router and raise it so the fluted cutting edge sticks above the ledge an amount equal to the desired width of the chamfered edge.

ROUTING THE EDGES. I routed the chamfers in three passes, moving the fence toward the bit between each pass, see Steps 1, 2 and 3 in Fig. 5. (You have to reset the featherboard between each pass.)

There's a number of things to keep in mind when routing. First, start by routing the ends of the workpiece, then clean up any chipout by routing the sides. Next, to keep the bit from pulling the workpiece through the jig, move the workpiece from your right to left. Finally, position your hands so you can feed at a constant rate. If you stop in the middle, there may be a little divot in the routed surface.

It's a good idea to work with a test piece the same thickness as the drawer fronts. Then, on the last pass, sneak up on the final position of the fence to get the correct shoulder height. (It's 3/32" on the dresser.)

SANDING. Though routing creates a much cleaner chamfer than sawing, there's always a little bit of sanding left to do. I use a beveled sanding block like the one shown in Fig. 2 to get rid of any remaining "fuzz."

FINAL THOUGHTS. The one limitation of this technique is that the width of the chamfered edge is limited to the length of the cutting edge on the router bit.

On most common straight bits, this is only 1". However, there are longer mortise bits that have cutting edges up to 3" long.

One other thought. I used a ½" straight bit with a ½" shank to cut the chamfered edge. Although it's not necessary, I feel more comfortable using ½"-shank bits whenever possible.

FIGURE 3

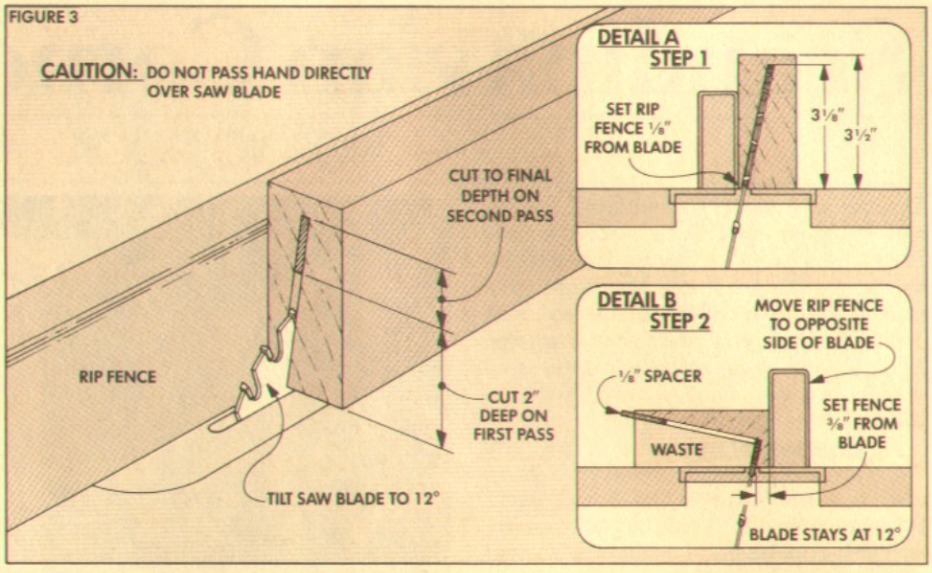

FIGURE 4

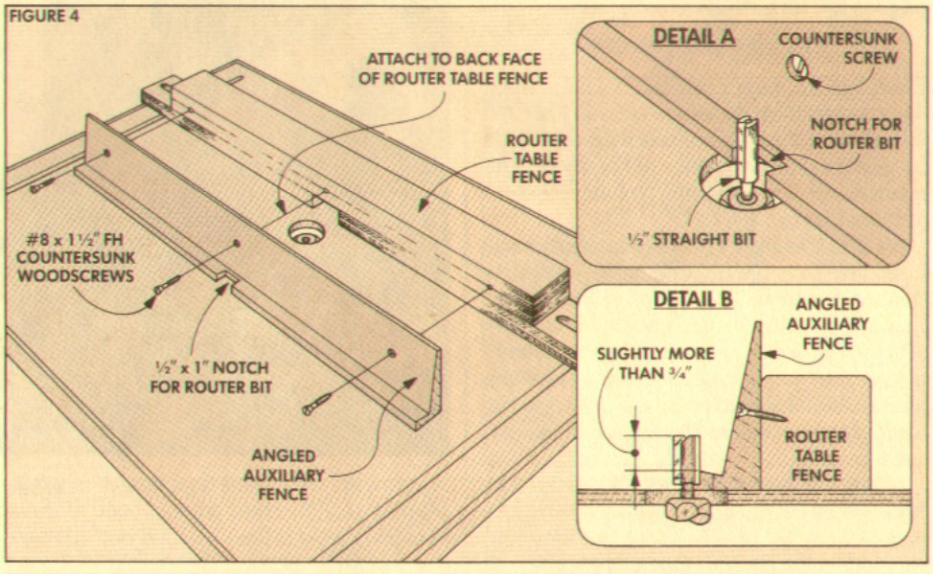

FIGURE 5

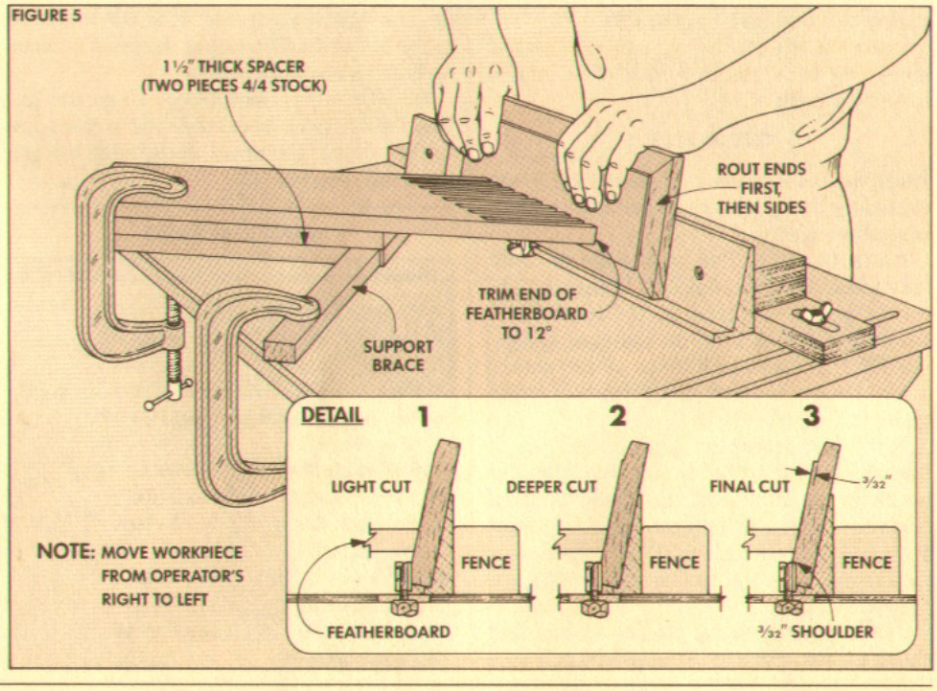

Scandinavian Corner Cabinet

NORDIC NOOK

This corner cabinet is reminiscent of cabinets found in rural Scandinavian homes. Since these were utilitarian cabinets (as opposed to fine furniture), they were often made of the most readily available and least expensive lumber — usually native pine. The joinery was equally simple and straightforward — butt joints held together with nails.

We made our corner cabinet of pine, too. (We were lucky enough to find some clear, quarter-sawn ¾"-thick Ponderosa pine.) However, I couldn't bring myself to using butt joints and nails. I joined the cabinet pieces with tongue and groove joints.

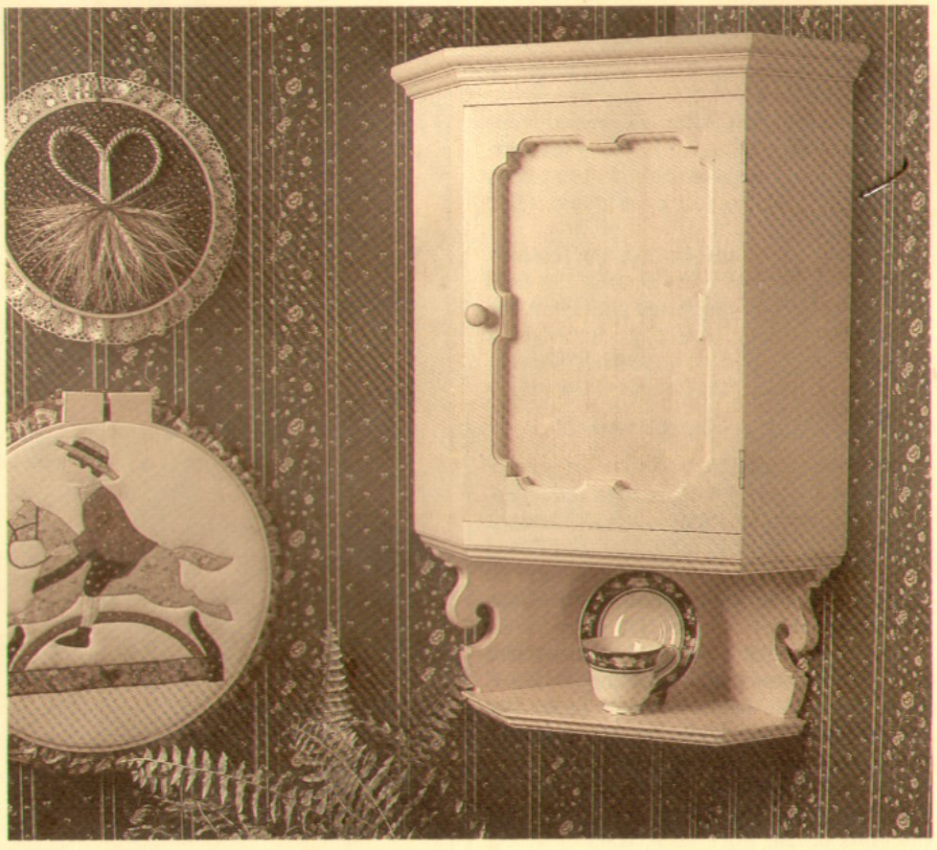

CABINET BACK PIECES

Since this is a corner cabinet, it's not shaped like conventional furniture or wall shelves. Essentially, it's a square box with one of the corners fit into the corner of the room. The opposite corner is "cut off" to form the front of the cabinet.

NAMES. Dealing with this unusual shape forced me to come up with names for parts that made sense. The "back" of the cabinet that fits into the corner is actually made up of three separate pieces. I call the two wide pieces that fit against the walls the back pieces (A). The narrow piece (between the back pieces) is called the corner piece (B), see Fig. 1.

GLUE UP BACK PIECES. To make the back pieces (A), begin by gluing up stock to make two solid panels about 30" long and 12" wide. When the glue dries, cut the panels to a finished length of 29".

CORNER PIECE. Next, cut the corner piece (B) to a rough width of 5" and a finished length of 29".

CUT BEVELS

After the back pieces and corner piece are cut to length, bevels are ripped on the edges of all three pieces.

BACK BEVELS. The *rear* edge on both back pieces (A) (the edge that fits against the corner piece) is ripped at 45° to create a finished width of 11¼" on the back pieces, see Fig. 1. Then both sides of the corner piece (B) are beveled so its finished width (point to point) is 4 5/16".

When beveling these edges, it may seem that the bevels are all backwards from the way they should be cut. But these beveled edges aren't joined like a conventional miter. Instead the corner piece (B) is lapped over the beveled edges of the back piece (A), see Detail in Fig. 1.

BEVEL SIDE PIECES. Before assembling these pieces, cut two side pieces (C) to a rough width of 6" and final length of 20¼", see Fig. 1. The *front* edge of each of these two side pieces is also beveled, but this time the angle is 22½°. (This edge will butt against the door frame in a conventional miter to form a 45° angle at the front corners on both sides of the door.)

Bevel rip each side piece (C) so the finished width is 5½" from the square rear edge to the point of the bevel on the edge toward the front, see Fig. 1.

JOIN SIDES TO BACKS

After the case parts are beveled, tongue and groove joints can be cut to join the sides (C) to the backs (A).

The side pieces each have a vertical groove (see Fig. 2) that accepts a tongue cut on the back, refer to Fig. 17.

GROOVES IN SIDES. The groove is cut on the inside face of the cabinet sides and is positioned so when the side pieces are

MATERIALS LIST

Overall Dimensions: 14¼" d x 21¾" w x 30¼" h	
A Cabinet Backs (2)	¾ x 11¼ - 29
B Cabinet Corner (1)	¾ x 4 5/16 - 29
C Cabinet Sides (2)	¾ x 5½ - 20¼
D Front Face Pieces (2)	¾ x 1 - 12⅜ (cut to fit)
E Top/Bottom Pieces (2)	¾ x 11¼ - 19
F Lower Shelf (1)	¾ x 11¼ - 19
G Adjustable Shelf (1)	¾ x 10 3/16 - 17¾
H Door Stiles (2)	¾ x 2 - 18⅛
I Door Rails (2)	¾ x 2 - 10⅜
J Door Panel (1)	¾ x 9¾ - 15¾
K Cap Molding (1)	¾ x 2 - 24
L Cap Ogee (2)	¾ x 1½ - 14
M Ogee Base (4)	¾ x 1½ - 15
N Keeper Strips (4)	½ x ⅝ - 18

CUTTING DIAGRAM

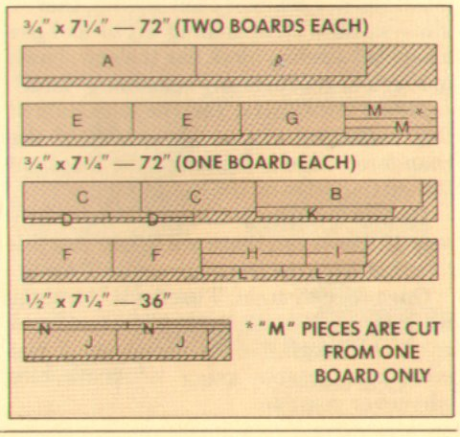

joined to the back pieces, the edges overlap (about ¼"), see Detail in Fig. 3.

This offset allows the edges of the sides to fit tightly against the wall, rather than the entire surface of the back panels. This way the cabinet can fit snugly into the corner, even if the walls are out of square.

To cut these grooves, I used a dado blade set up to cut a ¼"-wide groove, and raised to a height of ¼". Then the table saw's rip fence is positioned so it's 1" from the *outside* edge of the dado blade, see Fig. 3.

FACE STRIPS. Next, I cut the front face strips (D) to size, 1" wide and to a rough length of 15", see Fig. 3. Then a groove is cut on these pieces to join them to the cabinet's top and bottom, refer to Fig. 17.

These grooves are positioned using the stock to set the fence. To do this, position the fence so the distance between the *outside* edge of the blade and the fence is equal to the stock thickness, see Fig. 4.

DADOES

The last step is to cut dadoes on the cabinet's backs (A), corner piece (B) and sides (C). (These dadoes are used to join these pieces to the cabinet's top, bottom and lower shelf, refer to Fig. 17.)

TOP DADO. To position the top dado, leave the fence set up in the same position as it was for cutting the groove in the face pieces. Then cut a dado across the top of all five pieces, see Fig. 5.

BOTTOM DADOES. After cutting the top dadoes, an identical dado is made on the bottom ends of all five pieces with the same fence setting.

MIDDLE DADOES. Another set of dadoes is cut across the backs (A) and corner piece (B) to join to the cabinet's bottom, refer to Fig. 17. Positioning these dadoes is a little tricky. They have to be positioned so they line up exactly with the bottom dadoes on the two side pieces (C).

I found the best way to do this was to use a side piece as a gauge to position the rip fence. To do this, butt one end of the side piece against the fence. Then adjust the fence until the dado blade is precisely aligned with the bottom dado, see Fig. 6. (I practiced on a scrap until I was sure the setting was exact.)

When the dado on the scrap is aligned with the bottom dado on the sides, use this setting to cut the middle dado across the two back pieces and the corner piece.

SHELF SUPPORT HOLES. Before going on to making the other parts of the case, holes are drilled in the corner piece (B) and side pieces (C) that will be used later for supports for the adjustable middle shelf. (It's a lot easier to drill these holes now — before the case is assembled.)

The location of these holes is shown in Fig. 1. To make sure the holes are positioned alike on all three pieces, I used a scrap of pegboard as a drilling template.

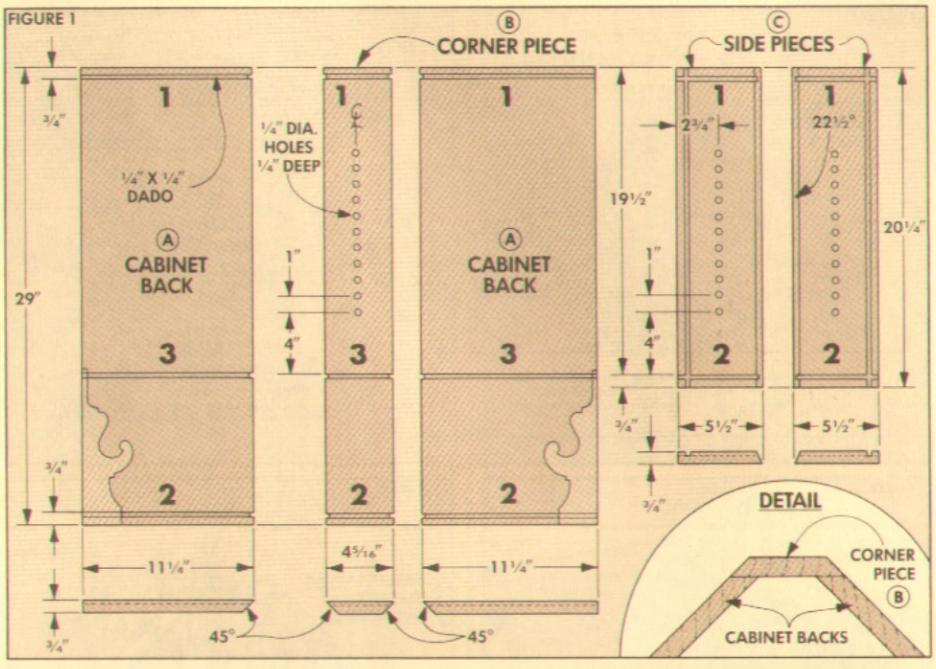

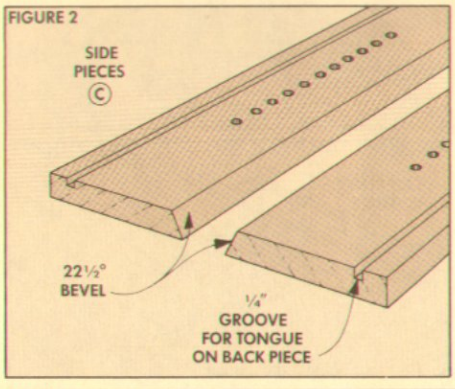

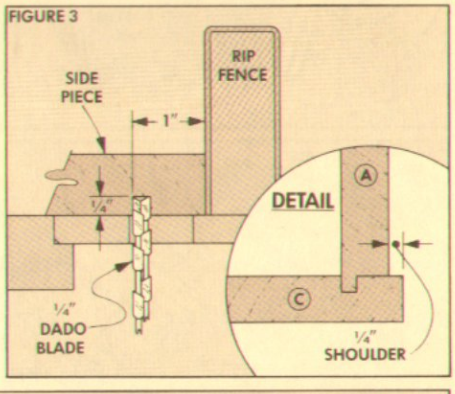

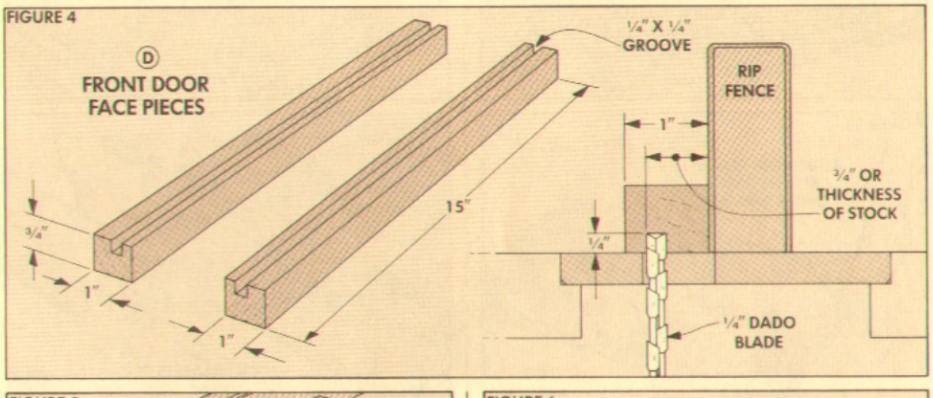

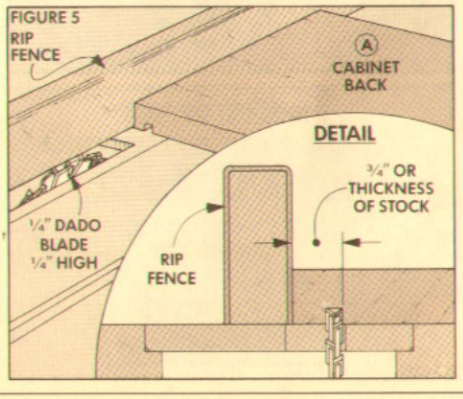

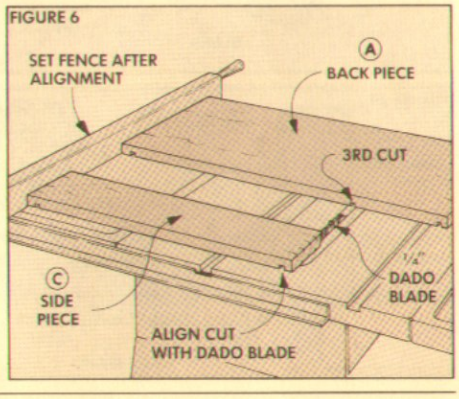

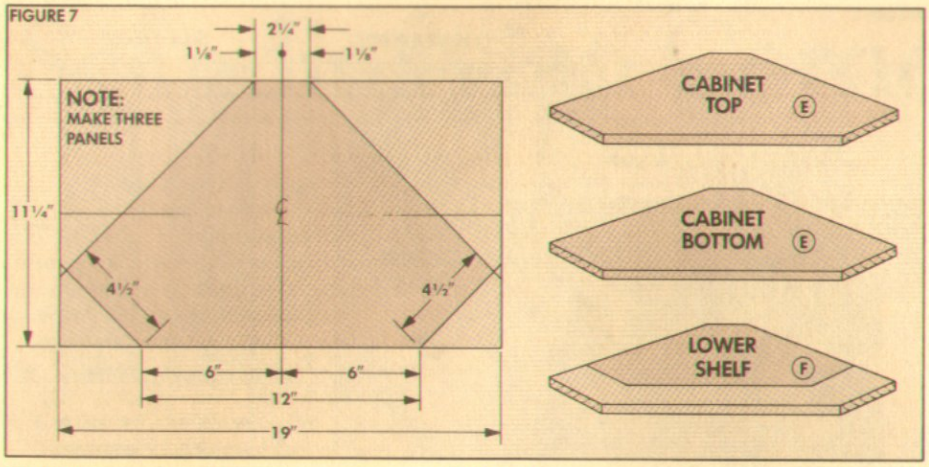

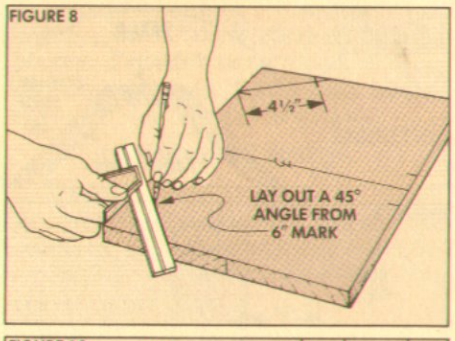

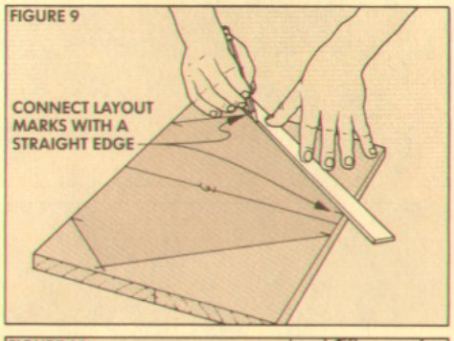

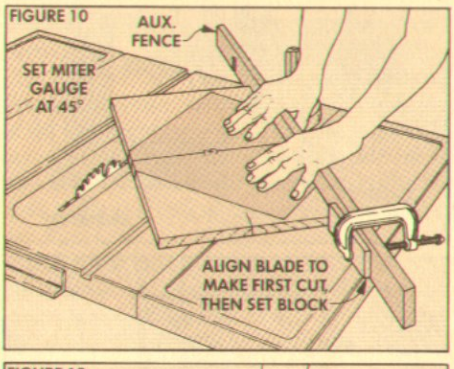

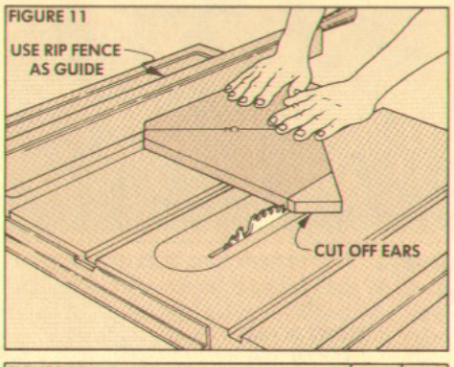

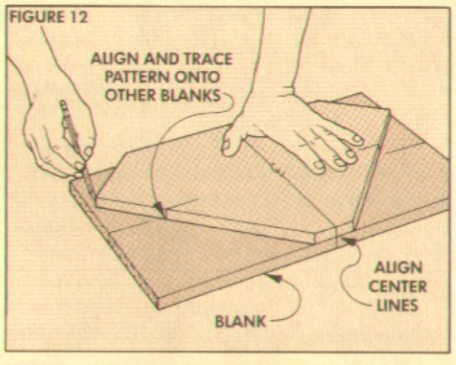

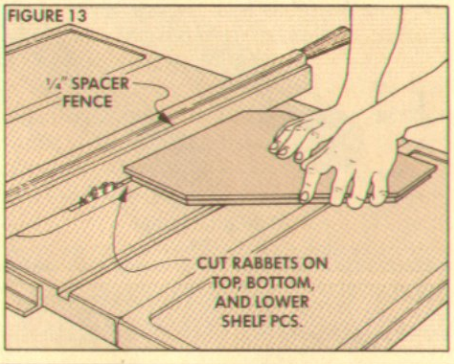

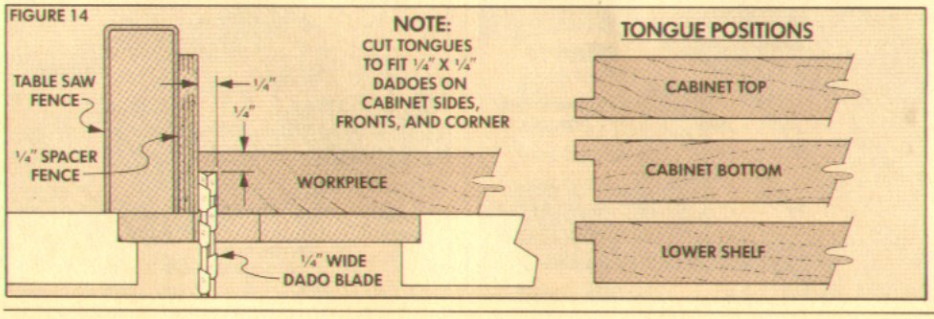

After the outside case parts are complete, the cabinet's top, bottom, and shelves can be made. So all the angles came out the same, I began by making the top (E), bottom (E), and lower shelf (F) the same size.

LAYOUT

Begin by gluing stock to make three blanks 11¼" by 19". Then mark the centerline across the width of each piece, see Fig. 7.

MARK WIDTHS. The centerline is used to lay out the shape of each piece. Since the back corner is 2¼" wide, mark a point 1⅛" out from each side of the line. Then, mark the 12" width of the front edge by marking points 6" out from the centerline.

MARK SIDES. The marks on the front edge are used for laying out the diagonal lines to match up with the backs (A) and sides (C) of the cabinet. To do this, use a combination square to strike a 45° line from each mark on the front edge, see Fig. 8. Then mark a point along these diagonals 4½" from the front edge.

MARK BACKS. To mark the diagonal lines for the backs, connect the marks on the back edge with the marks just made (4½" in from the front edge), see Fig. 9.

CUT TO SIZE

Now the top piece can be cut to size. The first cuts are made to form the angled backs.

SET MITER GAUGE. I used the miter gauge with a long auxiliary fence to make these cuts, see Fig. 10. Begin by setting the gauge at 45°. Next, make a trial cut *outside* the line to make sure the blade cuts parallel to the line.

CUT BACK PROFILES. When the gauge is set correctly, align the pencil line with the blade and clamp a block to the fence to keep the workpiece from shifting, see Fig. 10.

After the waste is cut off, flip the workpiece end for end, keeping the same edge against the fence. Then with the workpiece braced against the block, remove the waste on the other back edge.

CUT FRONT PROFILES. Now the small corners that will fit into the sides can be cut. Begin by positioning the blank so one back edge is against the fence and the other back edge faces the rear of the saw. Then hold the workpiece tight against the fence and cut off the waste, see Fig.11.

PANEL TEMPLATE. After the top panel is cut to shape, it's used as a template for the others by aligning the centerlines (see Fig. 12), and tracing the outline on the blanks for the bottom and lower shelf.

TONGUES

The next step is making the tongues that join the pieces together. These tongues are formed by using a ¼" dado blade to cut rabbets on the top, bottom, and shelf pieces.

FENCE SPACER. To cut the tongues, I began by clamping a ¼" Masonite spacer to the table saw fence to keep the dado blade

from cutting the fence itself. Then slide the fence and spacer over until the dado teeth barely rub the Masonite, see Fig. 14.

TONGUE THICKNESS. The tongues need to be cut ¼" thick to fit the ¼" dadoes in the other pieces. To set the thickness, raise the dado blade slightly less than ½" and make a practice cut on a scrap. Keep raising the blade a little at a time until the tongue left on the scrap fits the dado snugly.

FORM TONGUES. I made tongues all the way around all three blanks because they're all identical at this time, see Fig. 13. (The front and side edges on the shelf will be cut away, refer to Fig. 17.)

BACK TONGUES. While the table saw is set up, tongues are formed on the two back pieces (A) to fit the grooves in the cabinet sides (C). (Note: The tongue is on the same face as the *long* point on the bevel, see Detail in Fig. 16.)

DECORATIVE PROFILE

The next step is cutting the decorative profile on the lower end of the two back pieces (A). I used a template for this.

MAKE TEMPLATE. To make the template, begin by laying out a 1" grid. Then make the profile by drawing circles with a compass, see Fig. 15. (A free full-size pattern is available, see Sources, page 24.)

POSITION PROFILE. To position the profile, align the bottom edge of the template with the bottom groove on the cabinet back (A), and the front edge against the edge with the tongues. Then trace the pattern and cut out the profile.

LOWER SHELF

After the profiles are made, the lower shelf can be cut to size. Since the front edge of the profile determines the actual size of the shelf, the cabinet is dry-assembled first.

SCREW TOGETHER. To hold the cabinet together, I drove a single #8 x 1½" flathead woodscrew centered on the back pieces and the corner piece, see Fig. 17. (Don't screw in the shelf yet.)

LOWER SHELF. Now the lower shelf can be cut to size. Begin by pushing it into position and make a mark on the front edges of the shelf right at the edges of the profiles, see Fig. 17. Next, square out lines from these marks and mark a point 3¾" from the edge. Then connect these points across the front and cut the shelf to shape.

ADJUSTABLE SHELF

The last step is to make an adjustable shelf to fit inside the cabinet. While the cabinet is dry-assembled, mark the inside perimeter on the cabinet's bottom (E). Use the dimensions on this piece to lay out the shape of the adjustable shelf (G).

PROFILE EDGE. After the adjustable shelf was cut to size, I routed a profile on the front edge using a ¼" round-over bit on the router table, see Fig. 18.

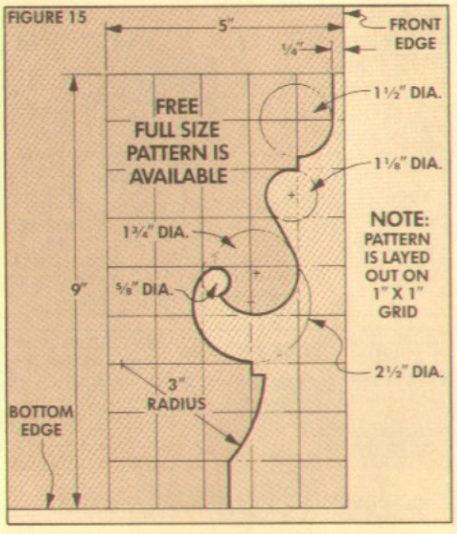

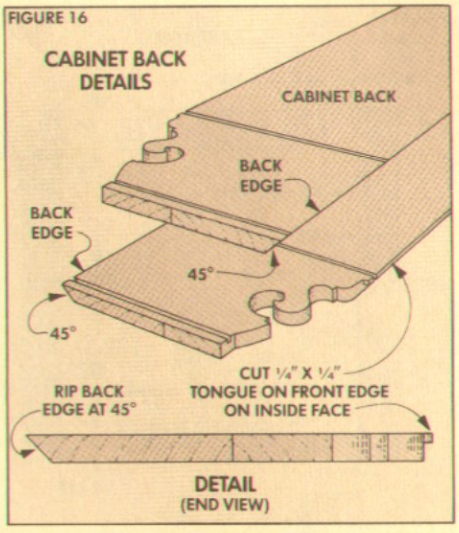

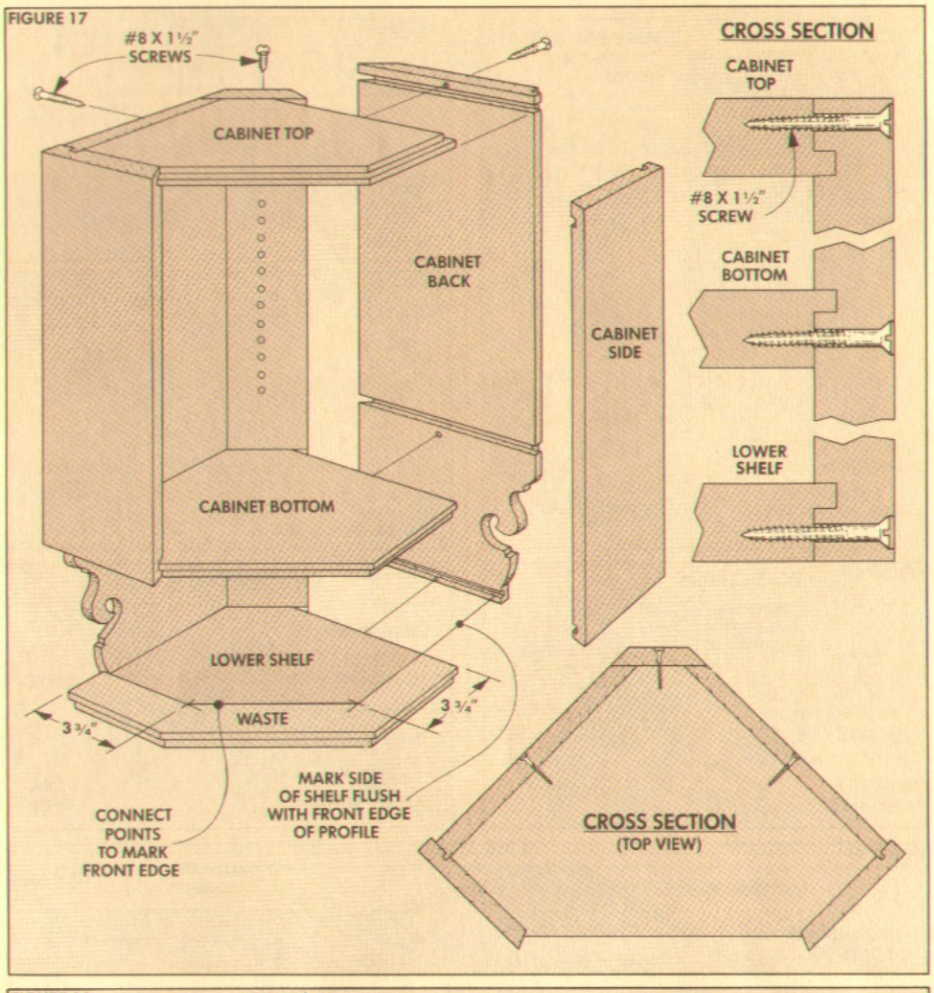

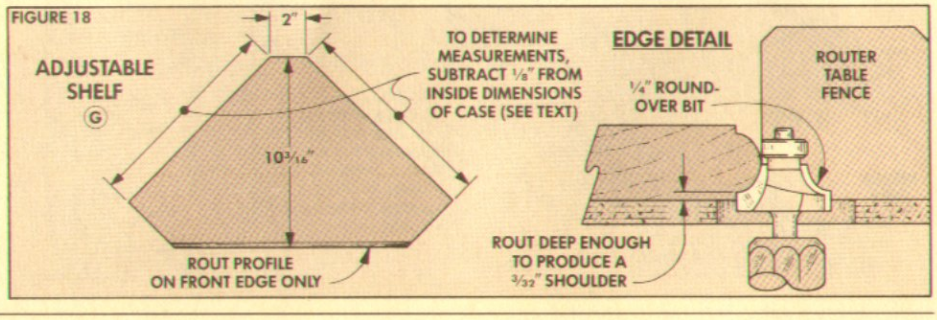

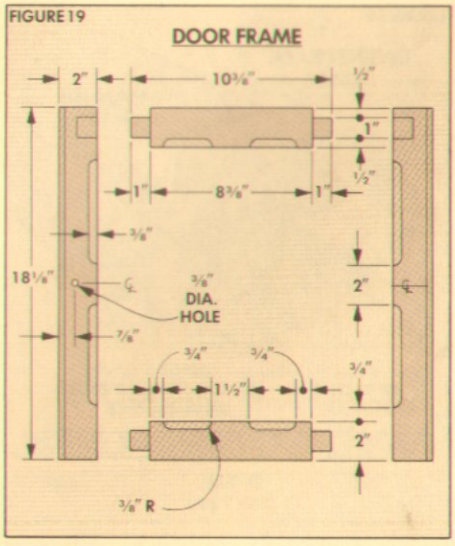

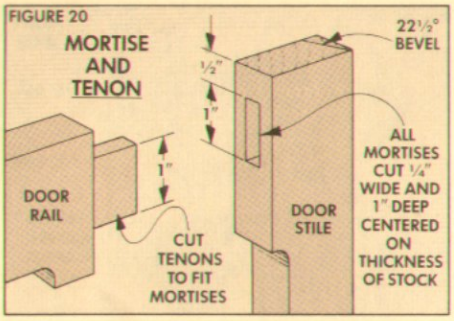

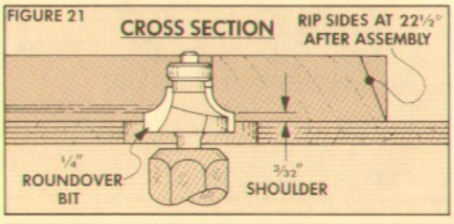

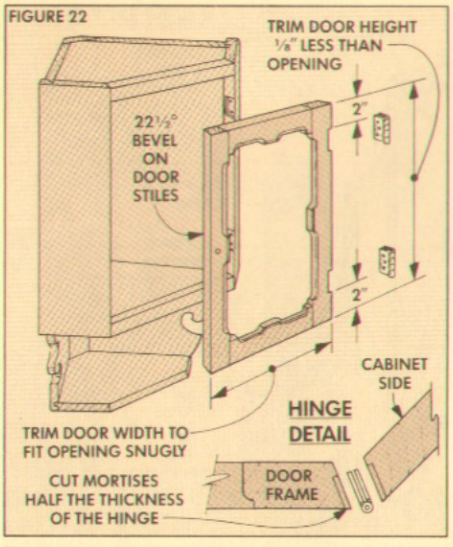

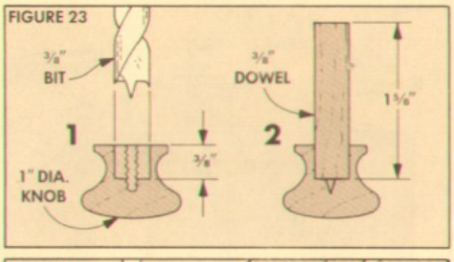

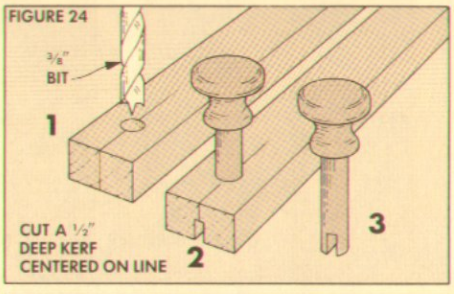

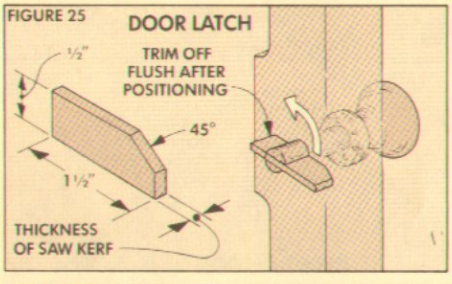

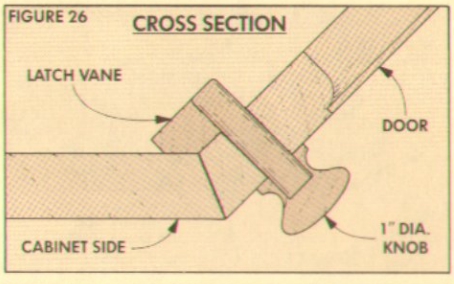

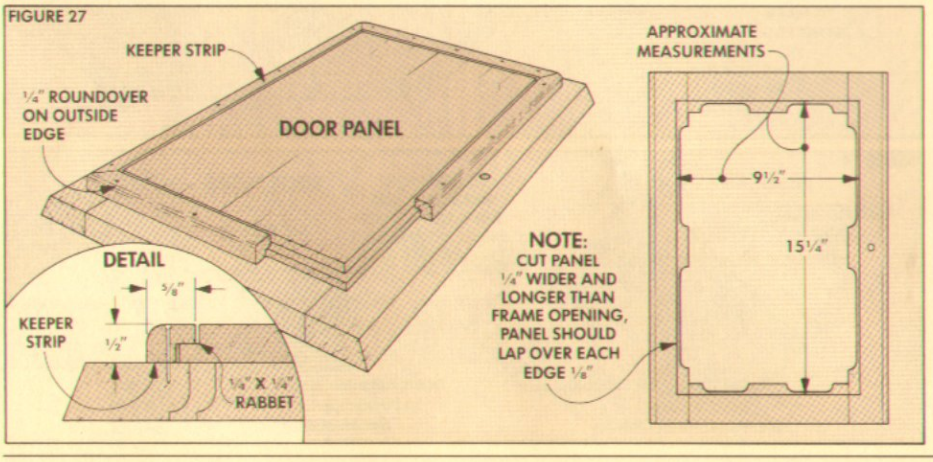

THE DOOR FRAME

With the cabinet case complete, I went about making the door. Since the door is sized to fit , the first step is fitting the face pieces (D) that form the top and bottom of the opening, refer to Fig. 22. Then make the door frame that consists of two stiles and two rails joined with mortises and tenons.

Begin by ripping all four pieces to 2" wide. Then cut the rails 10⅜" long (see Fig. 19), and cut the stiles to length to 18⅛" — about ⅛" less than the opening between the top and bottom facing strips (D).

JOINTS. After cutting the stock to size, cut ¼"-wide mortises centered ½" from the ends of the stiles. Then form tenons on the ends of the rails, see Fig. 20.

PROFILE. Before assembly, cut out a double scalloped profile on the inside edges of the door frame parts, see Fig. 19. Then, glue the door frame together.

ROUT EDGES. To soften the scalloped edges, rout a profile with a ¼" round-over bit on the router table, see Fig. 21.

Note: When routing these edges, be careful not to "slip" off the curved ends of the scallops. The corners should be left with hard, square edges to contrast with the routed edge.

TRIM TO SIZE. To fit the frame to the height of the opening in the case, trim the outside edges of the rails until the door fits between the face pieces with about 1/16" to spare on both ends, see Fig. 22.

To fit the frame to the width of the opening, begin by ripping a 22½° bevel off each stile, leaving the door a little oversized. Then, sneak in on the cuts until the face of the door frame fits flush with the beveled edges on the sides of the cabinet.

INSTALL HINGES. When the door fits its opening, install two fixed-pin hinges 2" from the top and bottom of the door, see Fig. 22.

DOOR LATCH

Before fitting the panel in the door frame, I fitted the latch.

TINKERTOY. The latch I used looks like a Tinkertoy. The ⅜" dowel shaft that goes through the door is glued into a wooden knob on one end and has a slot for a flat latch vane on the other, see Fig. 25.

KNOB. To make the knob, I bored a hole in a 1" wooden drawer pull to fit the dowel shaft, see Fig. 23.

SLOT JIG. After fitting the knob, the other end of the shaft is slotted for the latch vane using a simple jig, see Fig. 24.

To make this jig, begin by marking the centerline on a piece of scrap about 2" wide. Next, drill a ⅜" hole through the scrap about 1" from the end on the centerline.

CUT SLOT. To cut the slot, raise the saw blade so it projects just ½" above the table. Next, insert the dowel into the hole so the end is flush with the bottom of the jig. Then

adjust the saw fence so the blade is centered on the centerline, and push the jig through the blade.

LATCH VANE. To make the latch vane, rip a thin strip of wood to fit the slot (about ⅛" thick). Next, cut it to ½" wide by about 1½" long. Then cut off one corner at 45° with a hand saw, see Fig. 25.

FIT LATCH. Now the vane is fitted to hold the door shut. To do this, close the door and slide the vane in the slot until the angled corner of the vane fits in the inside corner of the cabinet, see Fig. 26. Then glue the vane and trim off the excess.

PANEL

Now the door frame is ready for the panel. In keeping with the simplicity of the cabinet, this panel is mounted to the back of the door frame (rather than set into grooves).

CUT TO SIZE. Glue up ½" stock for the panel. Then to determine the final dimensions, measure the distances between the bottoms of the scallops on the frames and add ¼" in each direction.

RABBET EDGES. The panel is held by rabbeted strips, see Detail in Fig. 27. Begin by rabbeting the edge of the panel to leave a ¼" x ¼" tongue around the edge.

To make the strips, cut a ¼" rabbet along one edge of a piece of ½" stock. Next, rip a ⅝"-wide strip off the edge of the workpiece. Then miter the ends for a tight fit around the panels, see Fig. 27.

TRIM MOLDING

After the door panel was in place I made trim molding for the top of the cabinet and for the front of the lower shelf.

SHAPE PROFILES. Begin by using the router table to shape the profiles on blank stock, see Fig. 28. Next, use the table saw to form the shallow rabbets where the molding pieces overlap.

ATTACH TRIM. After the moldings are shaped, they're glued to the case. I drove two small brads through each strip to act as clamps while the glue dried, see Fig. 29.

Shop Note: To conceal the nail holes, I "blind nailed" the brads, see page 23.

HANGING BRACKET

The last step before the finish is applied is making a "hook and bracket" hanger.

Begin by bevel ripping both edges of a piece of stock so the width between the points of the bevels is the same as the back of the cabinet, see Step 1, Fig. 30.

Next, cut the piece into two sections with the saw set at 45° to form the hook and bracket, see Step 2.

Now glue and screw the upper section (hook) to the cabinet. Finally, screw the lower section (bracket) into the corner studs of the wall with 3"-long dry wall screws.

FINISH. I finished the cabinet with exterior urethane varnish. (It's yellowish, not clear, so the pine took on instant age.)

FIGURE 28

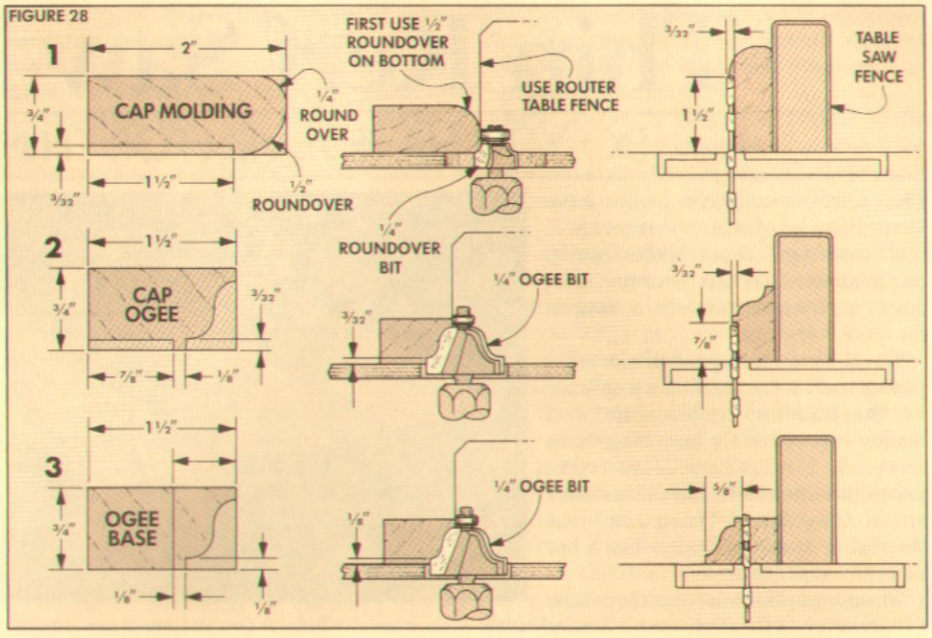

FIGURE 29

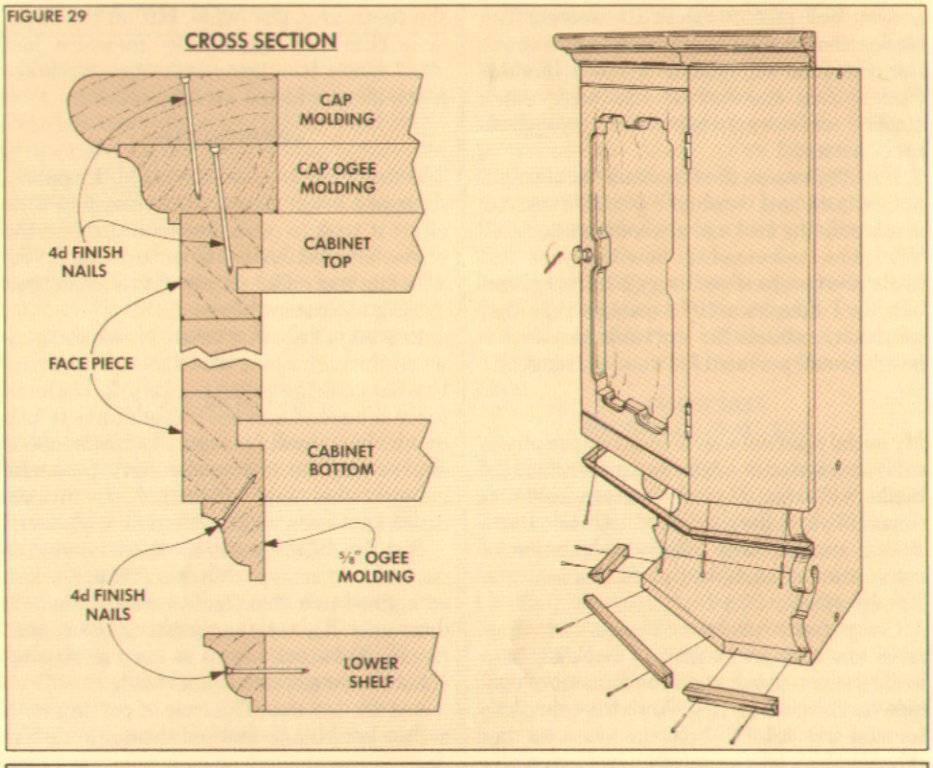

FIGURE 30

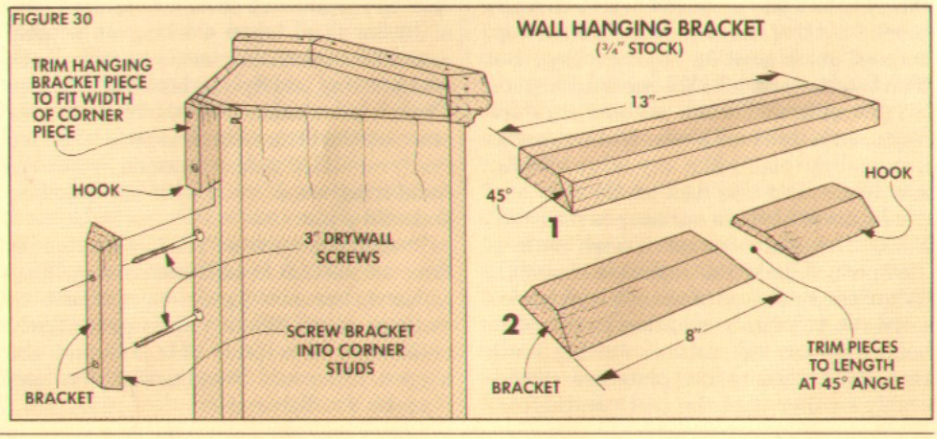

Thin Kerf Saw Blades

DO YOU HAVE A YEN FOR THIN BLADES?

Thin kerf circular saw blades have stirred up a lot of attention recently. A few years ago, these blades pretty much snuck into this country from Japan and went virtually unnoticed for quite some time.

Even though Japanese portable power tools were gaining acceptance by the building trades, thin kerf blades were one of the last things to be accepted. But as carpenters began using the then-new Makita circular saws, they found these saws cut through 2" framing lumber like a hot knife through butter.

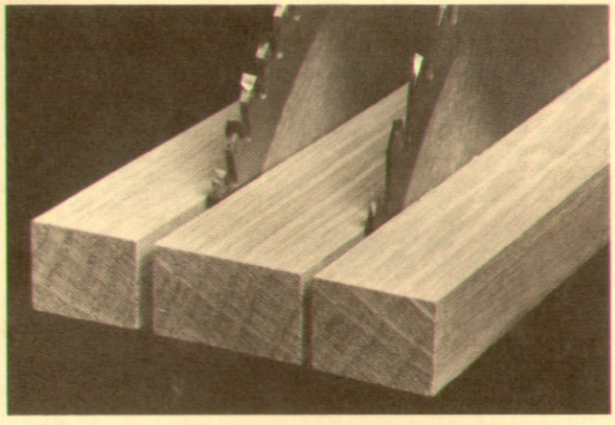

The assumption was that these new Japanese circular saws were loaded with power. But power wasn't the secret. The blades that came on the saws were much thinner than on typical western circular blades. And the carbide tips were much smaller (narrower) than what was considered "normal."

I didn't jump on the thin blade bandwagon at first because I consider a portable circular saw a building tool, not a woodworking tool. Yet I was impressed by how easily its 7¼" blade seemed to slice through framing lumber. So I bought a 10" Japanese thin kerf combination blade for my table saw to see how it would perform for woodworking.

REACTIONS

My initial reaction was to compare the physical characteristics of the Japanese thin kerf blade with the typical western carbide-tipped blade (Like the Freud LU84M, Delta #3516, etc.) (For a detailed evaluation of conventional carbide-tipped blades, see *Woodsmith* No. 27.)

Compared to western blades, the Japanese blade appears frail. I couldn't help feeling short-changed on the amount of carbide on the cutting tips. And, the thin plate seemed too light to hold up when cutting through thick hardwood lumber. I was ready to conclude that the blade was flimsy, cheap, and not much good for woodworking. But then I started using it. My opinion changed.

THIN PLATE. There's nothing mysterious about a thin kerf blade. It starts out as a steel disk (plate) like any other circular saw blade. But this disk on the thin kerf combination blade in our shop is just .057" thick. The plate on our Freud blade is .088", which make the Japanese blade just 65% of the thickness of the western blade.

SMALL TEETH. In addition to the plate being thinner, the carbide cutting teeth that are brazed to the plate are considerably smaller than the teeth on the conventional blades. On the western blades the teeth are .125" wide, but on the Japanese thin kerf blade they measure just .068" wide. In other words, the teeth are just 54% as wide as western teeth.

IMPRESSIONS

The first time I tested the blade, I ripped a scrap of 4/4 oak. I was surprised by how little effort it took to push the wood through the blade. The motion was so smooth that it was a feeling more like slicing with a knife than cutting with a saw blade.

EFFORTLESS CUTTING. Now, pushing wood through a saw blade never amounted to what could be called hard work. If a lot of force is needed and the motor starts to bog down, it's usually a sign the blade needs sharpening or the motor isn't powerful enough. (8/4 oak will bog down my old Sears saw even with a brand new blade.)

But the difference in the force needed to cut with a sharp thin kerf blade when compared to a sharp conventional blade is dramatic. It's not exaggerating to say that ripping 8/4 stock seems as easy as ripping 4/4 stock on a conventional blade.

SAFER SAWING. The ease of cutting with a thin kerf blade made a dramatic difference in the amount of mental tension normally involved when working on a table saw. The smooth cut seems to make both cross cutting and ripping less intimidating. There's less tendency for the blade to generate all the little snaps and pops (that are really mini-kickbacks), especially when encountering mean wood with burls, knots, and wild grain.

ENERGY SAVINGS. This reduction in force means that in addition to not pushing as hard, the saw motor doesn't have to work as hard. While this is particularly noticeable on a table saw, I found the biggest difference in using the thin kerf blade on a radial arm saw.

RADIAL ARM SAW. I'm not a big fan of radial arm saws. The Sears radial arm saw in our shop is there to do one task — cut long boards into sizes that can be managed on a table saw. But even for this one job, a thin kerf blade makes up for a serious shortcoming in our radial arm saw — a lack of power.

The motor on this saw is so weak that cutting off even 4/4 stock bogs the motor down. When cutting thicker stock it sometimes comes to a standstill. Worse yet, it grabs and jumps forward.

A radial arm saw equipped with a thin kerf blade became a better (and safer) cut-off saw. Now it does its job without bogging down or digging in and trying to run across the board after my fingers.

ALL AROUND BLADE?

The thin kerf blade worked so well that I found myself using the blade most of the time. But it soon became clear that thin kerf blades aren't without their shortcomings. There are times when a conventional blade will outperform them — or at least outmuscle them.

SENSITIVE TEETH. The small teeth proved to be quite sensitive to breakage. This is because the braze joint where the tooth joins the plate is smaller than on conventional blades. Hitting a buried nail or banging the blade against the saw table can easily knock a tooth off a thin kerf blade. On the other hand, the heavier western blades can roll with the punch — even though the tooth might be chipped.

CROOKED TEETH. As for overall quality, I have yet to see a new Japanese thin kerf blade with the teeth perfectly aligned. A fresh out-of- the-box blade produces a less than perfect cut. The problem is the lack of side grinding. When a blade is not side ground, it's easy for one tooth to be out of line with the rest, leaving a tell-tale tooth mark on the side of the kerf.

SIDE GRINDING. To get the teeth into alignment, I've found it necessary to take a new blade to the sharpener and have the blade side ground before I use it.

Side grinding is the process of grinding the sides of the carbide tips so they all line up with one another. Even though side grinding is a normal procedure for a professional sharpening shop, be sure to tell your sharpener to use a very light touch. Since the carbide tips on a Japanese thin kerf blade are so tiny, as much as a third of the width might have to be removed to get the

sides of the teeth in line.

Note: The cost of side grinding should be considered when determining the *real* price of the blade. Since this operation is necessary, this cost ($7 to $10) theoretically should be added to the cost of the blade.

FLEXING. Even when the teeth are in line, it's hard to keep them traveling straight when the blade is spinning. This is a result of the stress on the thin plate.

It's obvious that a thin piece of metal will flex (buckle) more easily than a thick piece of metal. For this reason getting a glass-smooth cut is more difficult with a thin kerf blade than with a heavier blade.

As each tooth is cutting into the wood, it's being pushed by the blade's plate and resisted by the wood. This puts stress on the plate and tends to make it buckle.

Although this buckling is almost microscopic, it's enough to keep the teeth from tracking in perfect alignment. When just one tooth travels outside the path of all the rest it leaves a score mark.

PICKY, PICKY, PICKY. How serious is this scoring? That depends on how picky you are. Quite frankly, I have to use a hand lens to tell the difference in smoothness between a properly sharpened (and side-ground) Japanese thin kerf blade and a top-quality conventional blade. So the difference won't effect the quality of a glue joint.

If the finished edge is going to be seen, it probably will be planed or sanded anyway. But, if the scratch marks are so deep that a light touch-up won't remove them, then there's something more seriously wrong than a little blade flutter or bad side grinding. In this case, the blade should be returned for a replacement.

BINDING

These problems are minor when compared to what I consider the most serious shortcoming of Japanese thin kerf blades. This is their tendency to bind in the kerf, especially when making rip cuts.

CLEARANCE PROBLEM. The main reason thin kerf blades are more susceptible to binding than western blades is because the teeth are barely wider than the plate. This means the teeth cut a kerf that's barely wider than the plate is thick.

On a western blade with a plate .088″ thick and .125″-wide teeth, there's almost .02″ clearance on each side between the plate and the kerf walls. But on the Japanese blade with a plate that's .057″ thick and .068″-wide teeth, this clearance is just a hair more than .005″. In practical terms, this amounts to no clearance at all.

KICKBACK. The most serious consequence of this lack of clearance is "kickback." Kickback occurs most often when ripping. When the stresses in the wood are released, the sides of the kerf squeeze together and kerf grips the blade.

Once the kerf has a good grip on the blade, one of two things happens. The blade can get caught in the kerf and bog down the motor. Or, it will bind, twist, and throw the workpiece right off the table.

OVERHEATING. The second consequence of poor clearance isn't as dangerous to the operator as kickback, but the results are disastrous to the blade. This is the heat generated as the blade plate rubs on the walls of the kerf.

As the plate rubs and heats up, the metal in the plate starts to expand. But, because the saw plate is flat and circular, it can't gain length the way a bar of steel can. As a result it twists and buckles.

To resist twisting and buckling, most blades have "expansion slots." These slots allow the edge to swell a slight amount without distorting the blade.

"I really like using Japanese thin kerf blades — under the right conditions."

This same phenomenon occurs with both thick and thin plates. But, since a thick plate has more mass, it acts as a "heat sink" to draw the higher temperature from one location and dissipate it. The effect is that the whole plate gets warmer, but one spot doesn't get really hot.

The plate on a thin kerf blade doesn't have sufficient mass to draw heat from a hot spot. So this heat stays concentrated in one spot and causes the blade to bend and buckle at this location.

USE COMMON SENSE

A thin kerf blade shouldn't bind or overheat if used sensibly and sensitively. But I've had some pretty scary kick-backs when using them. And I've also discovered (the hard way) how to cook the blade instantly.

DEEP RIPS. While I've never had a problem cross-cutting, you're asking for trouble when cutting a deep rip kerf in wild grain, resinous, or very hard wood. Here are three incidents that are engraved in my memory:

The first time the blade got bound in the kerf was when I was resawing redwood 4x4s for the garden bench in *Woodsmith* No. 45. The wood was resinous and the grain went every which way. I should have expected trouble, but the blade grabbed and overheated instantly. (It's sitting on my desk now with four blue spots on the plate.)

The second incident (with another blade) occurred in a similar situation. This time I was resawing maple turning squares for the workbench in issue No. 50. Although maple is not resinous and the grain looked straight, enough tension was released for the wood to grip the plate. The result was more blue spots and another ruined blade.

My scare came with a kickback when I was ripping some short pieces of 8/4 maple. This time the workpiece wasn't massive enough to stop the blade and the piece was thrown back at me.

HOW DEEP? If there's a lesson to be learned it's this: examine the wood for grain pattern before ripping it. And even if the grain looks straight, don't make deep kerfs.

By a deep kerf I mean cutting more than 1″ deep, but not all the way through (like the first pass when resawing or making a large rabbet or notch).

With the blade buried in the wood the gullets in front of the teeth have a hard time clearing sawdust. To make matters worse, a large area of the plate is where it rubs on the sides of the kerf.

NO WARNING. When the plate rubs, friction builds up so fast that there's no warning. The blade begins to bind one moment; the next instant it either throws the workpiece or it's ruined by the heat that draws the temper from the plate.

STRAIGHT CUTS ONLY. It's also critical not to apply side pressure to a thin kerf blade. This means that it's especially important that the trunnion is square with the path of the miter gauge and the fence is parallel to the blade. (For more on fine-tuning a table saw, see *Woodsmith* No. 51.)

PREVENTION. The best way to prevent burning the blade is to avoid any situation that can cause it. This means using the blade for through-cuts only. And when ripping, be sure to have a wedge ready to keep the kerf spread behind the cut so the wood can't come back together to pinch the plate.

RECOMMENDATIONS

After all these warnings, it sounds like I'm getting down on thin kerf blades. Not at all. I've come to think of them as "delicate" blades and I really like using them — under certain conditions. But just as I don't use carefully sharpened chisels to scrape glue, I don't use thin kerf blades for rough work.

PRICE. Let's get to the bottom line. There was a time when Japanese thin kerf blades cost about $40. Not anymore; they now cost more than $60 (plus the cost of side grinding). The price increase is the same as with all Japanese products from cameras to cars — it reflects the difference in the exchange rate between the dollar and the yen. So, until this disparity is corrected, Japanese thin kerf blades will cost a lot.

Even if they were priced the same, a conventional combination blade would remain my meat and potatoes blade. But I'll still keep a Japanese thin kerf blade for the times when I've selected clear, straight-grained wood and the smoothness of the thin kerf blades makes the cutting easier — and leaves me feeling a lot more comfortable using it.

Solvents

SOLVENT SOLUTIONS

Is there a difference between mineral spirits and paint thinner? When do you use turpentine? Are all lacquer thinners the same? What is denatured alcohol used for?

Walk into almost any hardware store and stand in front of the rows of solvent cans. It's easy to come up with a lot of questions.

THE BASICS

To answer the questions, it's useful to start with a basic statement about finishes: All liquid finishing materials have some sort of volatile solvent in them. If you look at the label on a varnish can, for example, it might say that the product is "42% Non-volatile material and 58% Volatile material."

A volatile material is a liquid that evaporates rapidly. Solvents are the volatile parts of the finish that are added to help flow the non-volatile solids onto the surface. Once the solvent evaporates all that's left to form the surface film are the non-volatile solids.

One way to look at this is that you only end up with 42% (or whatever the non-volatile percentage is) of the product you bought — that's all that's left on your project. The other 58% has evaporated into the air. But without the solvent, you would have to spread the gummy varnish resins like the ancient Egyptians did on mummy cases — with a flat stick.

The trick in thinning the resins to the correct brushing consistency (or cleaning finish from a brush) is knowing which solvent will dissolve what finish. There are thousands of solvents (water is a solvent), but I usually keep four solvents in my shop: mineral spirits, naphtha, lacquer thinner, and denatured alcohol.

COLD SOLVENTS

Mineral spirits and naphtha fit into a group of solvents that I call "cold solvents." This is to distinguish them from the stronger "hot solvents" such as lacquer thinner. (The actual temperature of the hot solvents is not any warmer than the cold solvents, but they're called hot since they dissolve just about any standard finish.)

The cold solvents can be further divided into two categories: Those distilled from natural ingredients such as turpentine, and those distilled from petroleum.

TURPENTINE. "There's a whole group of people who like turpentine because of it's odor. They remember smelling it in their father's shop when they were kids and they continue to use it," explains John Moser of Wood Finishing Supply Company. "It dries slower and allows you more working time. This is important for certain applications like graining or glazing, but, in general, oil varnishes already take a long time to dry. There's no reason to compound the problem with turpentine."

Turpentine is made by steam distilling gum from pine trees. Traditionally it was used as a solvent with paints that used linseed oil as a base. (These are the old oil-based paints, not water-based latex.) Linseed oil dries slowly and turpentine does an excellent job of transferring oxygen to the oil to help it dry.

With the passing of linseed oil-based paints and finishes, turpentine has taken a back seat to petroleum distillates.

PETROLEUM DISTILLATES. If you look at the small print on most varnish, stain, and other oil-based finish cans, you will see the phrase "Contains Petroleum Distillates."

This group of solvents is distilled from oil (petroleum). The crude oil is heated and distilled and what comes off at different boiling points are different distillates (chemically called "aliphatic hydrocarbons"). The material that comes off within a certain range will contain a certain number of carbon atoms (to make the molecules pentane, hexane, heptane, and octane). Some of these go into gasoline, others kerosene. As you go on through the distillation process you get the molecules necessary to make thousands of products including plastics and solvents.

MINERAL SPIRITS. One group of petroleum distillates is called "mineral spirits." If you look at the label on a can of varnish it might list the volatile material as mineral spirits. And if you look at the thinning and cleaning instructions, it's likely to list mineral spirits as the best solvent.

Mineral spirits costs considerably less than turpentine and evaporates much quicker. Some mineral spirits are labelled "odorless" — they tend to evaporate the fastest, but are the weakest. Some manufacturers add small amounts of aromatic hydrocarbons (xylene and toluene) to slightly strengthen the solvent but this adds some odor ("low-odor mineral spirits"). If still more of these aromatic hydrocarbons (15%-25% of the total) are added, you get a product that's found in varnish — "regular odor mineral spirits."

To thin most materials that require mineral spirits, it doesn't make any difference which one you use. The odorless is usually more expensive, but if you are working indoors, it might be worth it.

PAINT THINNER. I thought I had this all figured out until I really started looking closely at the labels. One can was labelled "Mineral Spirits." Next to it was another can from the same manufacturer that was labelled "Paint Thinner, 100% Mineral Spirits." So what's the difference?

"Paint thinner can be anything that will thin paint," according to John Moser. "By law, something cannot be called mineral spirits unless it actually is mineral spirits. If the label says it's 100% mineral spirits, then it is. But be careful. Mineral spirits thins paint, but not all paint thinners are mineral spirits."

This is the source of a lot of confusion. If one can is labelled "Mineral Spirits" and another "Paint Thinner," they may be exactly the same product. To thin an oil-based paint, it probably pays to just buy "Paint Thinner." On the other hand, if you want to thin varnish, you probably should choose "Mineral Spirits" instead.

Always check the label on the can of finish. If you thin it with the wrong solvent, it might kick the resins out of solution.

NAPHTHA. The other common petroleum distillate solvent is naphtha. (Correctly pronounced either "nap-tha" or "naf-tha", it's the most misspelled word in woodfinishing). It's often called VM&P (Varnish Maker's and Painter's) naphtha.

Note: Naphtha is sometimes called benzine. This is not to be confused with the dangerously toxic carcinogen, benzene.

Naphtha is highly volatile, and I use this characteristic to an advantage in two different situations. First, when mixing up paste wood filler, I thin it with naphtha. (See *Woodsmith* No. 39 for more on paste wood fillers.) I want the paste wood filler to be enough of a liquid to flow into the pores, but I want it to dry as soon as possible so it can be wiped off almost immediately.

I also use naphtha as a cleaning agent. It's not strong like acetone or lacquer thinner and it evaporates quickly. This is useful when cleaning pumice and oil from a lacquered surface after rubbing it down.

HOT SOLVENTS

The most powerful common finishing solvents are called "hot solvents." They have a strong odor and are highly flammable.

LACQUER THINNER. One solvent in this category is lacquer thinner. The main ingredients in lacquer thinner are aromatic hydrocarbons. (Aromatic since they have such a strong odor. Hydrocarbons since they are made by distilling coal tar.)

If you look at a label on a can of lacquer thinner, you will usually find one or two strong aromatic hydrocarbons: toluol (sometimes called toluene), or xylol (xylene). It may also contain one or more ketones (such as acetone) and some petroleum distillates. This combination of ingredients makes a solvent that you wouldn't want to light a match around.

THINNING LACQUER. The most common use of lacquer thinner in finishing is to thin nitrocellulose lacquer. When spraying, for example, it's a usual practice to dilute the lacquer 50% or more with lacquer thinner. Some aerosol spray lacquers will contain as much as 70% solvents.

DISSOLVING FINISHES. Since lacquer thinner is so powerful, it will dissolve or soften just about any finish. When finishing with lacquer, each coat dissolves the coat under it to create one layer.

I even use lacquer thinner as a finish stripper for small surfaces. It's not a substitute for paint strippers on larger surfaces though, since it evaporates quickly.

Lacquer thinner can be used to dissolve contact cement spills. Be careful — the odor is strong and it's highly flammable.

METHYLENE CHLORIDE. The hot solvent with the worst reputation is methylene chloride. Most strippers and brush cleaners contain methylene chloride.

When methylene chloride vapors are absorbed into the body they turn into deadly carbon monoxide that deprives the blood of oxygen. In small quantities, most humans can accept this. But if you have a history of heart problems, don't use paint remover (or use one that states "Contains No Methylene Chloride.") For the rest of us, it's best to work with adequate ventilation — preferably outdoors.

OTHER HOT SOLVENTS. There are other solvents available that I would consider "hot" (for example acetone and methyl ethyl ketone), but they're used as cleaning solvents and thinners for polyester resins, epoxies, and vinyls — not the kind of finishes found in the typical home shop. If the finishing material you are using doesn't *specifically* recommend these solvents as a thinner, don't use them.

DENATURED ALCOHOL

The fourth solvent I keep in my shop (but not my liquor cabinet) is denatured alcohol. Denatured alcohol is alcohol that has poison, usually methanol (wood alcohol), added to it making it unfit for drinking — and free from liquor taxes.

SHELLAC SOLVENT. I have three main uses for denatured alcohol. First, it's the solvent for shellac. If you're using solid shellac flakes, denatured alcohol is needed to get it into a liquid state. When using liquid shellac, such as 3 lb. cut, you can make a thin sealer (1 or 2 lb. cut) that dries quickly by adding denatured alcohol.

Note: The "pound cut" refers to the percent of shellac flakes to the alcohol. Three pounds of flakes mixed in one gallon of alcohol would yield a 3 lb. cut shellac.

DISSOLVING DYES. A second use for denatured alcohol (or methanol) is to dissolve alcohol soluble aniline dyes. (For more information, see *Woodsmith* No. 40.)

CLEANING OFF PITCH. Finally, denatured alcohol is the best solvent I've found to dissolve the pitch off saw blades and router bits. A little alcohol on a rag will wipe away pitch that's really crusted on.

SAFETY

Solvents work because they dissolve organic materials. The problem is that your body is made of organic materials. So it's best to protect your skin (with gloves), eyes (with safety glasses), and lungs (with a proper respirator).

There's one point that should be made about solvents. A strong odor is not necessarily an indication of how toxic a chemical might be. Always read all of the warnings on the can.

FOLLOW THE DIRECTIONS

When you want to thin a finish or clean a brush, check the label of the *finishing* product. If it says "thin with mineral spirits" or "use mineral spirits to clean brushes," that's what to use for all thinning and cleaning. Don't substitute something else because it's on hand or you think a stronger solvent might work better.

One other thing. On some labels of finish there will be a specific brand solvent recommended. In some cases it's important to stay "within the family." Lacquer manufacturers, for example, will put a solvent with a specific chemical combination in their lacquer. Using a thinner from another manufacturer can create a finish that won't flow, cover, or dry correctly. And that's not the best solution (pun intended).

SIX BASIC SOLVENTS

TURPENTINE

- Distilled from pine trees
- Pleasant odor
- Used to thin oil-based paints, varnish
- Cleans brushes from oil-based finishes
- More expensive than mineral spirits
- Often replaced by mineral spirits

MINERAL SPIRITS

- Distilled from crude oil
- Used to thin oil-based paints, varnish, polyurethane, tung oil, Danish Oil, Minwax, oil stains
- Cleans brushes from oil-based finishes
- Evaporates faster than turpentine
- Odorless, low odor, regular odor
- Sometimes called paint thinner

NAPHTHA

- Distilled from crude oil
- Evaporates quickly (highly volatile)
- Used to thin paste wood filler
- Used as a gentle cleaning agent

LACQUER THINNER

- Distilled from coal tar
- Contains aromatic hydrocarbons, petroleum distillates
- Highly volatile, strong odor
- Used to thin lacquer for spraying
- Used to clean brushes from lacquer, Deft Clear Wood Finish
- Can be used in small quantities as a paint stripper
- Cleans up contact cement

METHYLENE CHLORIDE

- Ingredient in strippers, brush cleaners
- Extremely strong solvent
- Vapors can be dangerous
- Use outdoors

DENATURED ALCOHOL

- Alcohol with poison added
- Used as a solvent for shellac
- Used to dissolve alcohol soluble dyes
- Cleans pitch off saw blades, bits

Cleaning Brushes

BRUSH UP ON THESE TECHNIQUES

Cleaning brushes is not one of my favorite pastimes. In fact, for most finishing jobs, especially staining, I use polyfoam brushes. They lay down a smooth, even coat. But the best part comes afterwards — they're so inexpensive, I don't feel guilty about throwing them away. (Foam brushes shouldn't be used with lacquer or shellac since the solvents in these can dissolve the foam.)

However, there are times when I do want to use a fine bristle brush. When finishing spindles, moldings, and carvings it's easier to get the finish down into crevices with a bristle brush.

In these situations, a bristle brush is necessary. And it's important that the brush is clean before you use it. If there are any traces of hardened finish or stain left on the brush from the previous job, they could be deposited in the finish.

TWO SITUATIONS. There are two ways to approach cleaning brushes. The easiest way is to be conscientious and clean the brush right when you're finished using it. That's the ideal. But let's admit it: there are times when you don't quite get around to cleaning a brush right away. Then it gets hard and needs to be soaked in a strong solvent to get it clean.

A TIP. Before getting to the procedure we use to clean brushes, there is one other alternative. If you're going to reuse a brush in a day or two, you can get away without cleaning it. Just wrap it tightly in Saran Wrap or aluminum foil and place it in the freezer. (Don't let the kids confuse it with a popsicle.) When you want to use the brush the next time, take it out and allow it to reach room temperature.

IMMEDIATE CLEAN-UP

The most important factor in getting a brush clean is to get to it right away. The longer it sits, the harder it gets.

Start by wiping the brush back and forth on some old newspaper or cardboard to remove as much of the finish as possible. Then pour about ¾" of the correct solvent in a shallow dish and work the brush back and forth against the bottom of the dish. (A small glass bowl with tapered sides works well for this.) Note: See the article on page 20 for the correct solvent.

While working the brush in the solvent, occasionally turn the bristles skyward so the solvent can wash out any caked-in finish that's up against the metal ferrule.

COMB THE BRUSH. If the brush is really full of crud, I grab my "brush comb." The best brush comb I've found is a heavy metal pet comb used to comb dogs and cats. I picked one up at a local pet store for $3.80 and it should last a lifetime. The comb works great to clean the brush and straighten out any tangled bristles.

CHANGE THE SOLVENT. After most of the finish is out of the brush, pour out the dirty solvent (save it for later use in a capped jar) and pour some clean solvent into the dish. Then, repeat the process, only this time work the bristles between your thumb and forefinger, see Figure 1.

SOAP AND WATER. Next, squeeze a little dishwashing detergent onto the bristles and run it under warm tap water. Then continue to work the bristles between your fingers until a lather forms. The detergent won't dissolve any finish, but it will help wash away any hardened particles.

After washing the brush with soap and water a few times, rinse it with clear water, and comb it out one more time. Then dry the bristles with a paper towel.

HARDENED FINISH

If the finish on a brush has been allowed to harden, more drastic action has to be taken. In these situations, I soak the brushes in a brush cleaner (such as Klean-Strip's Brush and Roller Cleaner or Behlen's Klex Brush Cleaner).

These cleaners soften just about any finish because they contain so many different solvents: petroleum distillates for oil-based paints and varnishes, toluenes, acetones and ketones for lacquers, alcohol for shellac, and for good measure methylene chloride, the main ingredient in most paint strippers.

OVERNIGHT IN CLEANER. To recondition a hard brush, hang it overnight from a wire in a can or jar of brush cleaner. The level of the cleaner should reach up to the point where the bristles join the metal ferrule. To use a small can or jar, I usually drill a second hanging hole in the brush handle right above the metal ferrule, see Figure 2.

CLEAN AS BEFORE. After the brush soaks overnight, clean it out with the comb and cleaner (as the solvent), and then soap and water, as described above.

STORAGE

The worst thing you can do when cleaning or storing a brush is to place it in a can of solvent with the bristles resting on the bottom of the can. The bristles can become permanently bent from the weight of the handle of the brush.

WRAP IN PAPER. To help the brush hold its shape and keep any dust off it while it's drying, I wrap it up with brown paper from a grocery sack. Cut a strip of paper twice as wide as the bristles and about 12" long. Then roll the brush over a couple of times in the paper and crease it over the end of the brush, see Step 1 in Figure 3.

Finish rolling the paper the rest of the length and wrap a rubber band around the brush to hold the paper in place, see Step 2. Then hang the brush from a nail so the bristles face down.

FIGURE 1

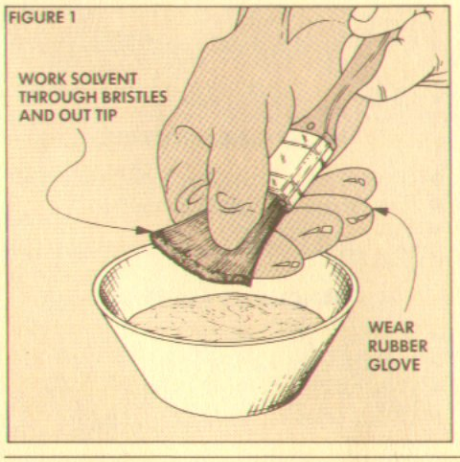

FIGURE 2

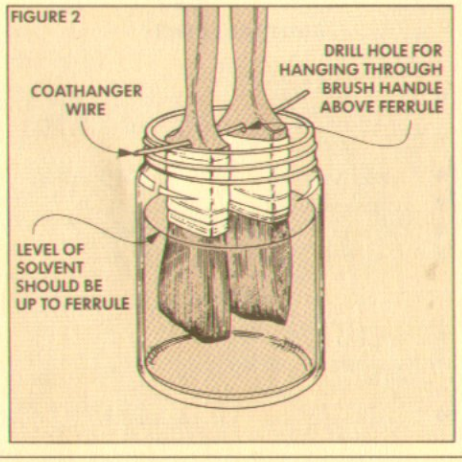

FIGURE 3

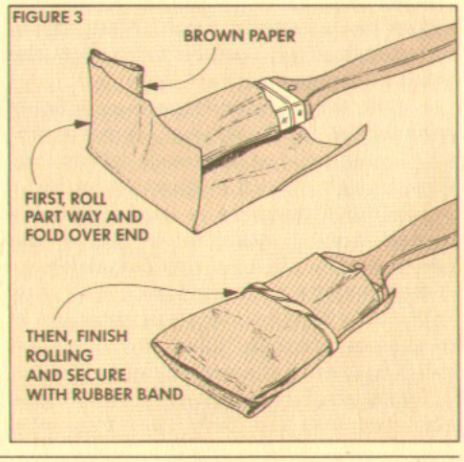

Talking Shop

SOME TIPS FROM OUR SHOP

SQUARING JIG

One of the most important considerations in making the dresser in this issue is that all of the assemblies must be square — especially the drawers. If the drawers aren't square, their faces won't be flush with the front of the cabinet.

To help hold the drawers square during assembly, I built a U-shaped squaring jig. Start by dry assembling one of the drawers. Then set the drawer on top of your bench or a flat piece of plywood and screw or nail down three pieces of scrap as a fence around it. Check with a try square that the inside corners are absolutely square.

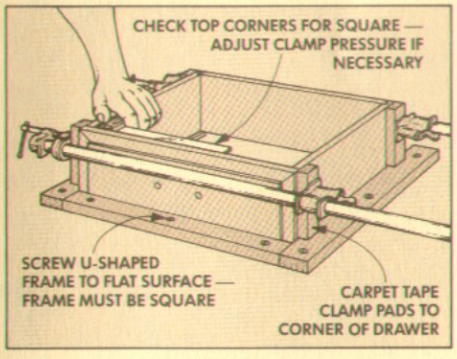

To assemble a drawer, spread glue in the joints, put the pieces together, and then slide it into the jig. Next, put clamps across the drawer to hold it together.

The jig holds the important part of the drawer (the bottom edge) square. But since the top is not held in the jig, check the top corners for square. Then allow the glue to set before removing the drawer from the jig.

BLIND NAILING

One of the problems of using nails in a project is how to cover the nail holes. I was faced with this problem when fastening the molding to the dresser.

WOOD PUTTY. The easy solution is to drive in the brad, countersink it, and fill the top of the hole with plastic wood putty. It's quick, but getting an *exact* color match with the wood is difficult.

There's another problem. Most woods (especially cherry) age and change color, but most plastic wood putties stay the same. It's a matter of trying to guess what color putty to choose that will match the wood two years (or more) from now.

ANOTHER METHOD. There's another method to hide the nails that has been used by finish carpenters for years — blind nailing. To do this you lift up a chip, set the nail, and then glue the chip back in place.

BLIND NAILER. To lift the chip, there's a special tool available called a "blind nailer." It looks like a miniature plane that holds a small chisel for a blade.

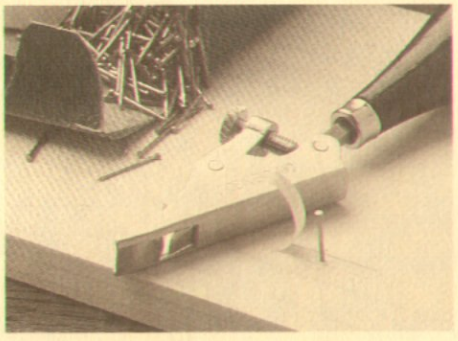

One source for this tool is Garrett Wade Company, 161 Avenue of the Americas, New York, NY 10013-1205; 800-221-2942; *Blind Nailer*, Order No. 44K01.01, $7.00. *Nailer plus Chisel*, Order No. 44K01.03, $11.95.

A blind nailer quickly lifts a thin chip, but if you're careful you can do the same thing with a ¼" (or smaller) chisel.

LIFT CHIP. Start by holding the chisel parallel with the grain and the bevel facing down, see Step 1. Then raise the back of the bevel slightly off the work surface and wiggle it forward or tap it lightly with a mallet. The goal is to curl up a chip without allowing it to break off.

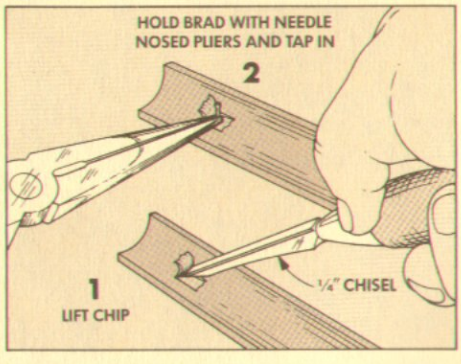

DRIVE BRAD. Next, grip a brad with a pair of needle nosed pliers and tack it most of the way in with a tack hammer, see Step 2. (To prevent splitting the molding, use as thin a brad as possible. We used ⅝" x 19 gauge brads on the dresser.) Then set the brad below the bottom of the chip with a nail set.

GLUE DOWN. After the brad is set, spread a very thin layer of glue under the chip with a toothpick and roll the curled chip down with your thumb, see Step 3.

HOLD UNTIL IT SETS. To hold the chip down tight until the glue sets, press a 1" dowel into the cove molding, see Step 4. If a very thin layer of glue has been used, it will set within a minute or two. (On a flat surface, use a flat block and put a piece of wax paper between the block and the chip.)

SAND. After the glue has dried completely (at least an hour), sand the surface flat. On the cove molding I wrapped the sandpaper around the dowel as a sanding block.

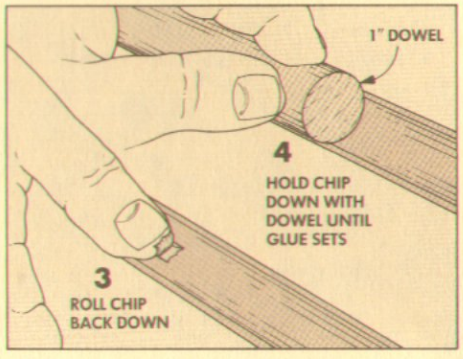

DISPOSING OF SOLVENTS

After washing a brush in a solvent, you're left with a pan of dirty, flammable, toxic liquid. What do you do with it?

REUSE THE SOLVENT. One of the most economical things to do with the solvent is to reuse it. Put the dirty solvent in a jar (such as a mayonnaise jar) and cap it tightly. In a couple of days the heavier paint solids or varnish resins will settle to the bottom.

After the solvents and solids have stratified, slowly pour off the clear solvent into another jar, and it can be reused for cleaning brushes.

HOW TO DISPOSE? There are times, though, when I do have to dispose of some solvent. I called the fire department to get some suggestions.

EVAPORATE IT. The one that made the most sense to me was to evaporate the solvent. Pour the liquid into a flat pan such as a cake or pizza pan and leave the pan in some *remote* location of your yard. Make absolutely certain that it's somewhere that kids or pets can't get to.

RETURN TO SUPPLIER. Sometimes local paint stores mix their own paints and have to dispose of used solvents. They typically contract with a waste disposal company to haul these away and might be willing to accept some of your solvents to add to theirs.

CAP IT TIGHT. While you're waiting to dispose of any solvent, there is one final suggestion: Keep the solvent in a covered jar and away from heat, flame, and kids.

Sources

LINGERIE DRESSER

We're offering the hardware for the lingerie dresser as a kit (see box below). Or you can order the parts from the following mail order sources:

THE WOODWORKERS' STORE, 21801 Industrial Boulevard, Rogers, MN 55374; 612-428- 2199 (Catalog: $2.00). *Bail Drawer Pull* (7), brass finish with flat backed ceramic rosettes, 3" boring, Order No. E1808, $3.85 each. (Note: The design of these pulls is slightly different than those shown in the photos in this issue and in the *Woodsmith* kit, but the boring distance and the ceramic rosettes are identical.) *Panel Retaining Buttons* (front drawer stops), 7 needed, tan plastic, use ½" #4 FH screws, Order No. D3802, $1.30 per 10.

MEISEL HARDWARE SPECIALTIES, P.O. Box 258, Mound, MN 55364; 800-441-9870 (Note: $25 minimum order. Catalog: $1.00). *Glide Strip*, self-adhering, pressure-sensitive plastic, ½" wide, approx. 18 ft. needed, Order No. 464, $2.99 per 10 ft.

FINISH. We finished the dresser with General Finishes new Two-Step System. It's a variation of their old Three-Step Sealacell System. The first step is a wipe-on penetrating sealer and the second step is a wipe-on, oil-modified urethane. It's an easy and beautiful finish. You can order it from:

GENERAL FINISHES, P.O. Box 14363, Milwaukee, WI 53214; 800-262-1050. *Step 1 Sealer*, clear, $5.95 pt., $8.95 qt. *Step 2 Wood Finish*, $5.95 pt., $8.95 qt.

CORNER CABINET

A full-size pattern of the decorative profile on the lower end of the two back pieces is available free of charge. Send for *Woodsmith* Pattern CORNER 53. Send your name and address to:

WOODSMITH PATTERN. Dept. CORNER53, P.O. Box 10350, Des Moines, IA 50306.

THIN KERF BLADES

There are two brands of Japanese thin kerf blades that seem to be a cut above the less expensive Korean and Taiwanese copies. These are blades with either the Tsumura or Custom-Track trademarks. (These blades are so similar that they appear to have been made by the same manufacturer. However, since all the importers claim their blades meet higher quality controls than the others, I reserve this as an observation rather than a fact.) You can order Tsumura blades from:

THE JAPAN WOODWORKER, 1731 Clement Ave., Alameda, CA 94501; 415-521-1810 (Catalog $1.50). *60-tooth 10" Combination Blade*, Order No. 08.360.10, $64.95.

For Custom-Track blades, write to:

WOODWORKER'S SUPPLY OF N. M., 5604 Alameda Pl. NE, Albuquerque, NM 87113; 800-645-9292. *50-tooth 10" Combination Blade*, Order No. 148-004, $59.35.

SOLVENTS

In the article about solvents we mentioned talking to John Moser of Wood Finishing Supply Company. His catalog has a wealth of information and products for finishing:

WOOD FINISHING SUPPLY CO., INC. 1267 Mary Drive, Macedon, NY 14502; 315- 986-4517 (Catalog: $2.50).

ATTN: KALEIDOSCOPE BUILDERS

In *Woodsmith* No. 52 we listed Edmund Scientific as one source for the double convex lens for the kaleidoscope project. Edmund has recently discontinued their toll-free 800 number. Their new phone order number is 609-573-6250. The price of the lens (No. 94,257) has increased to $10.35 plus $2.95 shipping. *Woodsmith* is still selling the lens and two brass rings for $12.95 (that includes shipping). Send your order and payment to:

Woodsmith Kaleidoscope Kit, P.O. Box 10350, Des Moines, IA 50306.

ATTN: BUNK BED BUILDERS

Recently we have heard from readers about problems obtaining the correct size hardware for one of our popular projects, the bunk beds in *Woodsmith* No. 38. It reminded us, once again, of the importance of having all of your hardware and parts *in hand before* you begin building a project.

This is especially true for projects that appeared in older issues of *Woodsmith*. The sources listed might change the sizes they carry, replace a product with others, or just discontinue products.

KNOCK-DOWN FITTINGS. There are a couple problems finding the correct bunk bed hardware. First, The Woodworkers Store has replaced the Elite (knock- down) Fittings (D4170) with a new fitting (D5781) that requires different sized holes than we specified in the plan. The new fittings will work fine for the bunk beds, but order them first, then drill your holes to match these new fittings.

THREADED INSERTS. The second problem we discovered is that all threaded inserts are not created equal. Even though the inside thread diameter is one size (7/16" for the bunk beds) the outside diameter may vary from manufacturer to manufacturer. The hole you drill to accept the threaded insert should match the particular insert you have in hand.

ATTN: WALL-PHONE BUILDERS

Two years ago (*Woodsmith* No. 42), we featured an old- fashioned wall phone (with real working hardware). We heard from a number of readers who had built the phones and were happy with the hardware. Then this past summer we began hearing from readers who had ordered the hardware from the source we listed (Dakota Woodworks of Kindred, North Dakota) but were having problems receiving the hardware. Most readers had sent in money and hadn't received the phone or any word on their order. To make matters worse, Dakota Woodworks had disconnected their phones.

We started looking into the matter and finally got a call in October from the Attorney General's Office for the state of North Dakota. He explained that Jerry Hunt, the owner of Dakota Woodworks, had declared bankruptcy.

If you have ordered the hardware and not received it, contact: North Dakota Attorney General's Office, Consumer Fraud Division, State Capital, Bismarck, ND 58505; phone 701-224-3404; U.S. Postal Inspector (Attn: R.D. Carlson), P.O. Box 64558, St. Paul, MN 55164-2201; U.S. Federal Trade Commission, Division of Enforcement (Attn: Vada L. Martin), 6th and Pennsylvania N.W., Washington, DC 20580.

If you are thinking of ordering the phone hardware, at this point we recommend that you don't order from Dakota Woodworks.

OTHER SOURCES. We are currently trying to develop another source for the hardware. If we do find another source, we will print it on this page in a future issue.

LINGERIE DRESSER KIT

Woodsmith is offering a kit of hardware for the lingerie dresser. This kit includes:

- (7) solid brass drawer pulls, with ceramic rosettes, 3" bore.
- (7) plastic retaining buttons (front drawer stops).
- 20 feet of self-adhering pressure sensitive plastic strip for drawer slides.

The total price (we pay the postage) for this kit is $29.95.

To order the kit, just write your order on a piece of paper: Lingerie Dresser Hardware Kit. Send it with your name, address and payment (no charge cards or phone orders, please) to: Lingerie Dresser Hardware Kit, P.O. Box 10350, Des Moines, IA 50306. Please allow 4 to 6 weeks for delivery.

(Note: For fastest service, please use the address with P.O. Box 10350 as listed above. Don't use the enclosed envelope.)